higher education & training

Department:
Higher Education and Training
REPUBLIC OF SOUTH AFRICA

T570**(E)**(J20)T

NATIONAL CERTIFICATE

ENGINEERING DRAWING N1

(8090261)

20 July 2018 (X-Paper)
09:00–13:00

REQUIREMENTS: ONE A2 drawing sheet

Drawing instruments and calculators may be used.

This question paper consists of 8 pages.

Copyright reserved

DEPARTMENT OF HIGHER EDUCATION AND TRAINING
REPUBLIC OF SOUTH AFRICA

NATIONAL CERTIFICATE
ENGINEERING DRAWING N1
TIME: 4 HOURS
MARKS: 100

INSTRUCTIONS AND INFORMATION

1. Answer ALL the questions.
2. Read ALL the questions carefully.
3. Number the answers according to the numbering system used in this question paper.
4. Use both sides of the DRAWING SHEET.
5. Draw a 15 mm border on both sides of the DRAWING SHEET.
6. ALL drawing work, including candidate information, must be done in pencil.
7. ALL drawing work must conform to the latest SANS 10111 Code of Practice for Engineering Drawing.
8. Write neatly and legibly.

Copyright reserved

QUESTION 1: GENERAL ENGINEERING DRAWING TERMS

1.1 Copy the answer block shown in FIGURE 1 full-sized to the DRAWING SHEET.

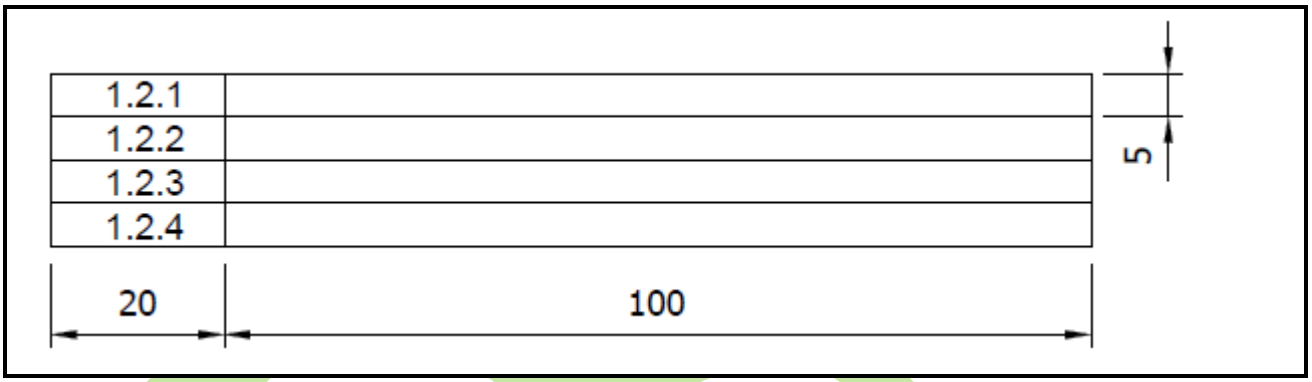

FIGURE 1 (1)

1.2 Neatly print FOUR types of plotters and printers in the block drawn in QUESTION 1.1. (4)

[5]

QUESTION 2: FREEHAND DRAWING

FIGURE 2 shows a view of a shifting spanner.

Use only a pencil and an eraser to draw the view of the shifting spanner in good proportion twice the given size.

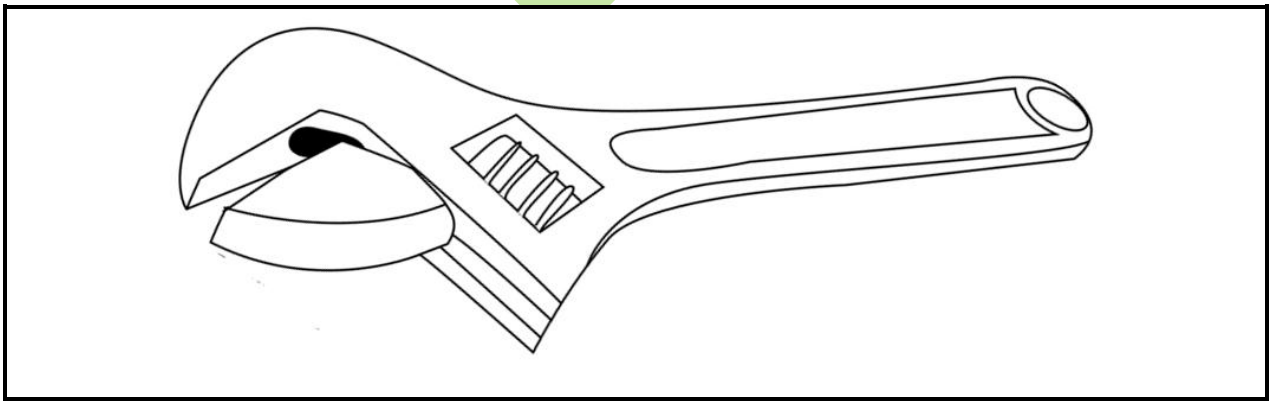

FIGURE 2 **[9]**

QUESTION 3: REPRODUCTION DRAWING

FIGURE 3 shows a view of a cover plate.

3.1 Draw, to scale 2 : 1, the view of the cover plate. Show construction lines in the construction of the ellipse using the four-centre method. (13)

3.2 Insert any TWO dimensions on the drawing. (1)

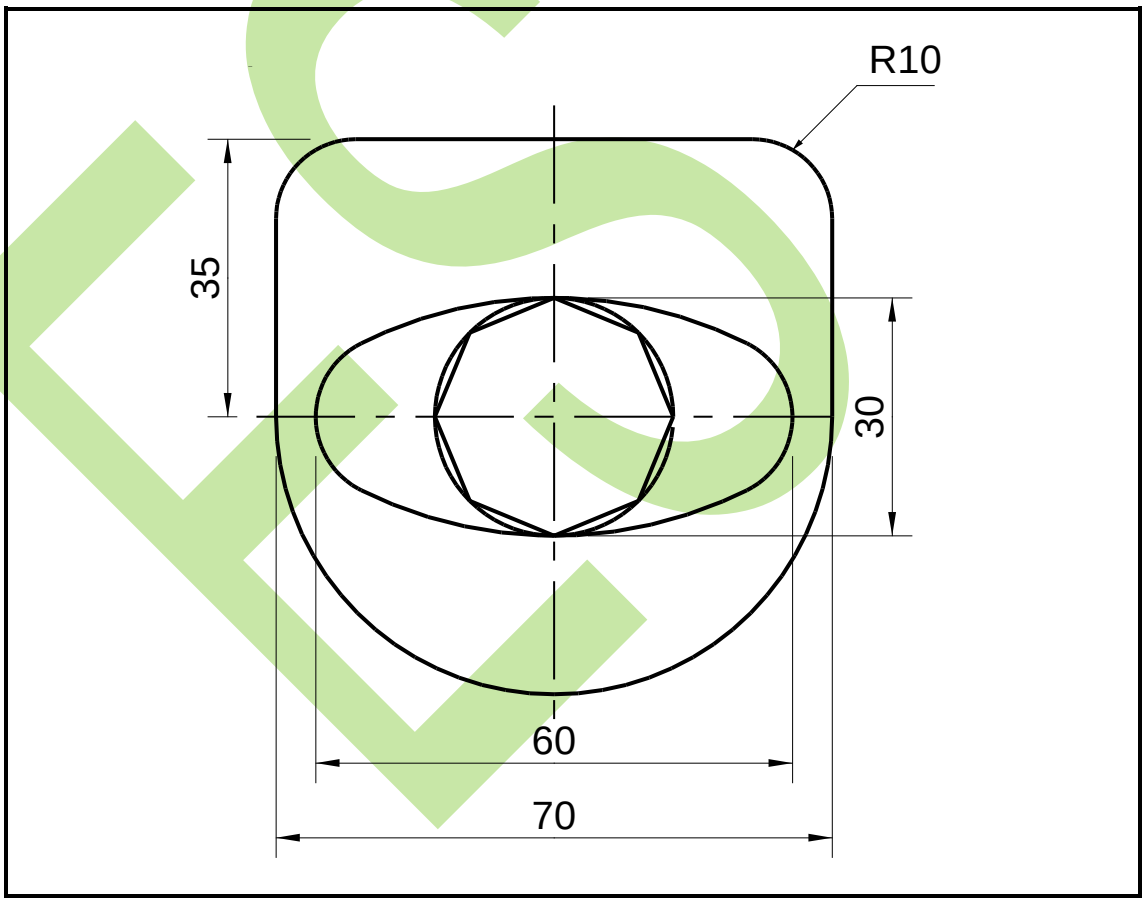

FIGURE 3 **[14]**

Copyright reserved

QUESTION 4: FIRST-ANGLE ORTHOGRAPHIC PROJECTION

FIGURE 4 shows an isometric view of a component.

Draw, to scale 1 : 1, the following views of the component in first-angle orthographic projection:

4.1 A front view as seen in the direction of arrow F (5)

4.2 A left view as seen in the direction of arrow L (4)

4.3 A top view as seen in the direction of arrow T (4)

4.4 The symbol for first-angle orthographic projection beneath the layout (2)

Show hidden detail.

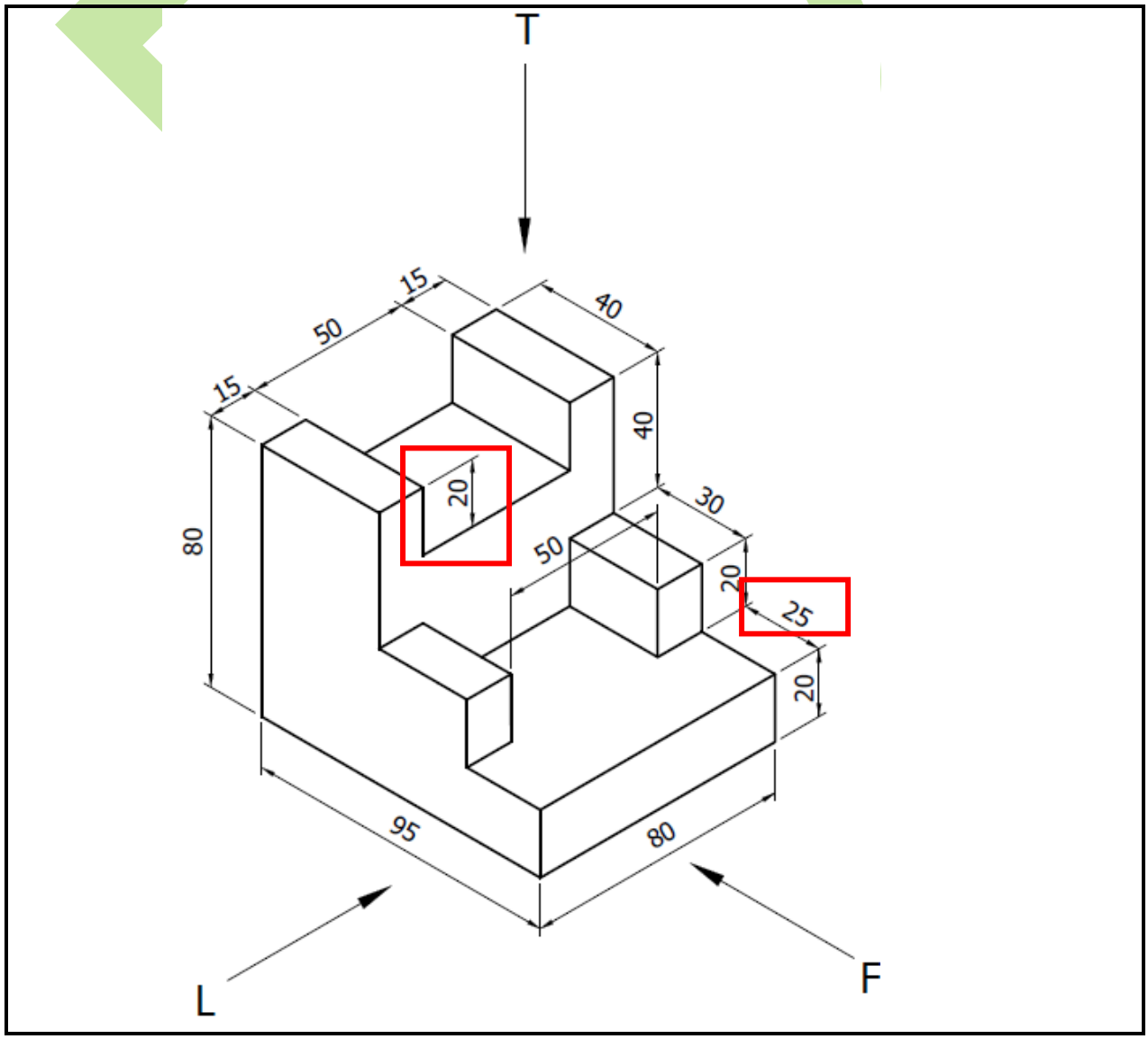

FIGURE 4 **[15]**

QUESTION 5: ISOMETRIC DRAWING

FIGURE 5 shows TWO primary views of a component in first-angle orthographic projection.

Draw, to scale 1 : 1, an isometric view of the component.

Point P must be the lowest point on the drawing.

NO hidden detail is necessary.

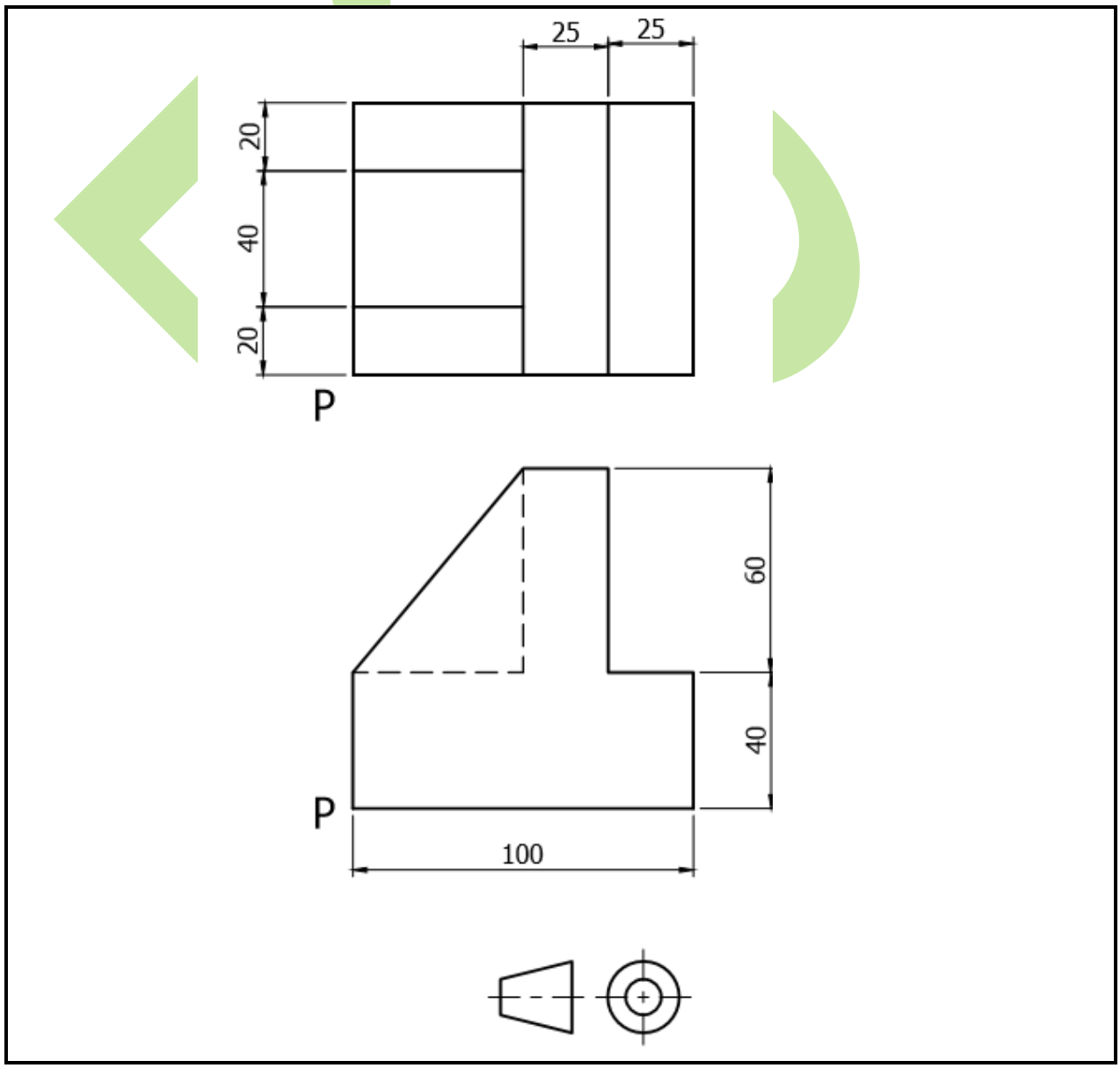

FIGURE 5 **[18]**

Copyright reserved

QUESTION 6: SECTIONAL DRAWING

FIGURE 6 shows two primary views of a casting in first-angle orthographic projection.

Draw, to scale 1 : 1, the following views of the casting in first-angle orthographic projection:

6.1 A full-sectional front view on cutting plane Y–Y (5)

6.2 A full-sectional left view on cutting plane X–X (4)

6.3 A top view (4)

6.4 Print the following title and scale:

CASTING
SCALE 1 : 1 (2)

NO hidden detail is necessary.

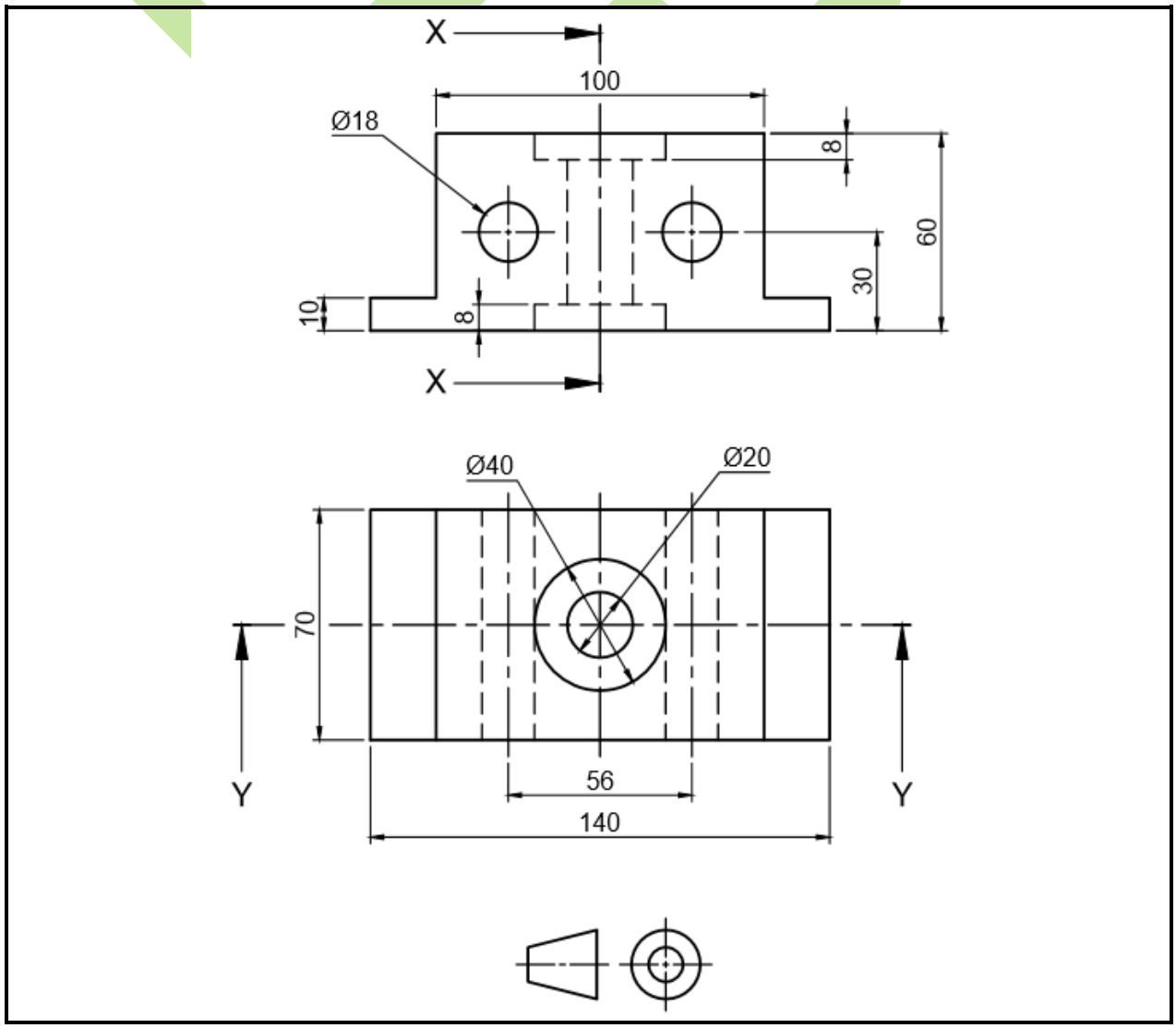

FIGURE 6 **[15]**

QUESTION 7: PRISMS AND PYRAMIDS

FIGURE 7 shows the front and auxiliary views of a hexagonal pyramid.

Draw, to scale 1 : 1, the following views of the hexagonal pyramid in first-angle orthographic projection:

7.1 The given front and auxiliary views (4)

7.2 A left view as seen in the direction of arrow L (5)

7.3 A top view as seen in the direction of arrow T (5)

NO hidden detail is necessary.

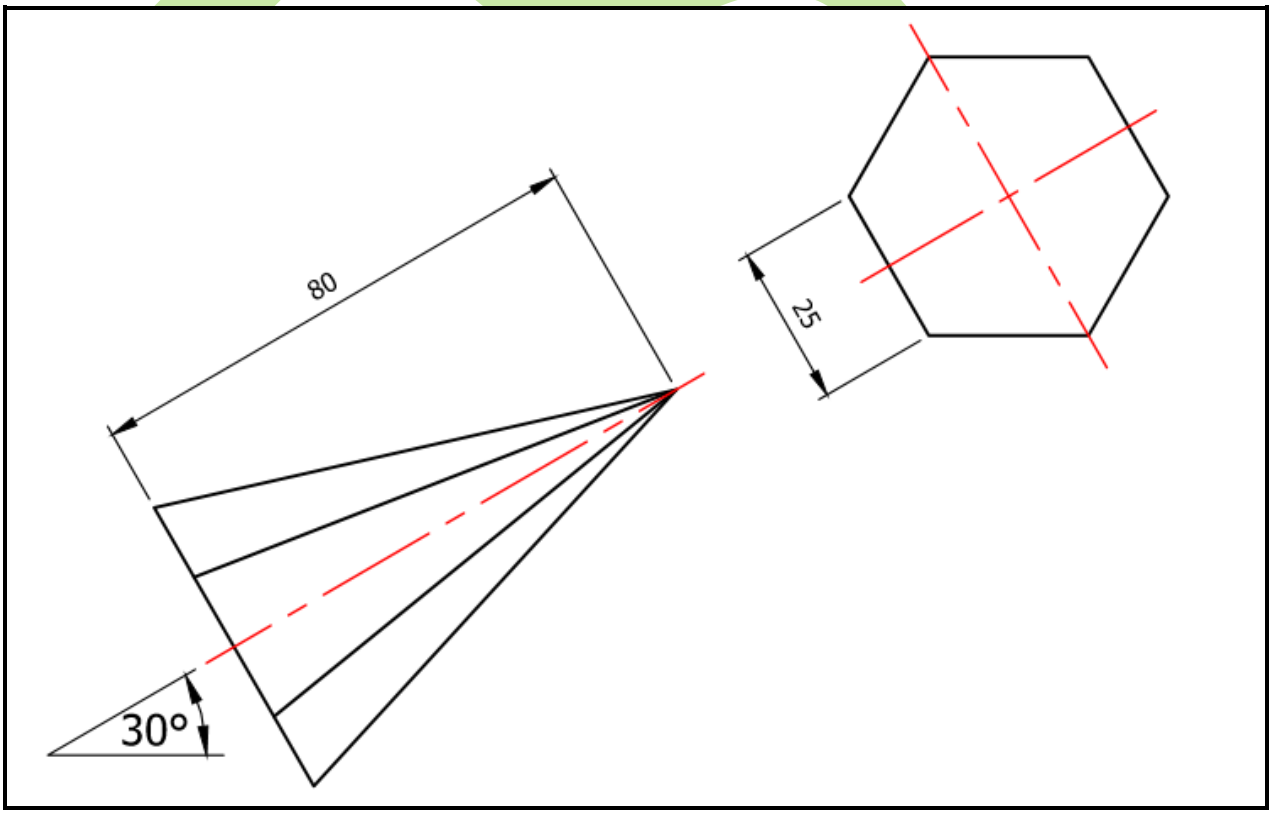

FIGURE 6 **[14]**

Balanced layout and neatness of the completed DRAWING SHEET. **[10]**

TOTAL: 100

Copyright reserved