higher education & training

Department:
Higher Education and Training
REPUBLIC OF SOUTH AFRICA

MARKING GUIDELINE

NATIONAL CERTIFICATE

ENGINEERING DRAWING N1

20 JULY 2018

This marking guideline consists of 12 pages.

Copyright reserved

INSTRUCTIONS AND INFORMATION

1. Copying and scanning of drawings will affect the accuracy of the drawings on the marking guideline.

2. ALL markers are requested to prepare their own marking guideline to use during the marking of candidates' ANSWER SHEETS.

QUESTION 1: GENERAL ENGINEERING DRAWING TERMS

1.1 and 1.2

1.2.1	PEN PLOTTERS
1.2.2	INK JET PLOTTERS
1.2.3	THERMAL PRINTERS
1.2.4	LASER PRINTERS

(4 × 1 + 1 mark for drawing the block) **[5]**

QUESTION 2: FREEHAND DRAWING

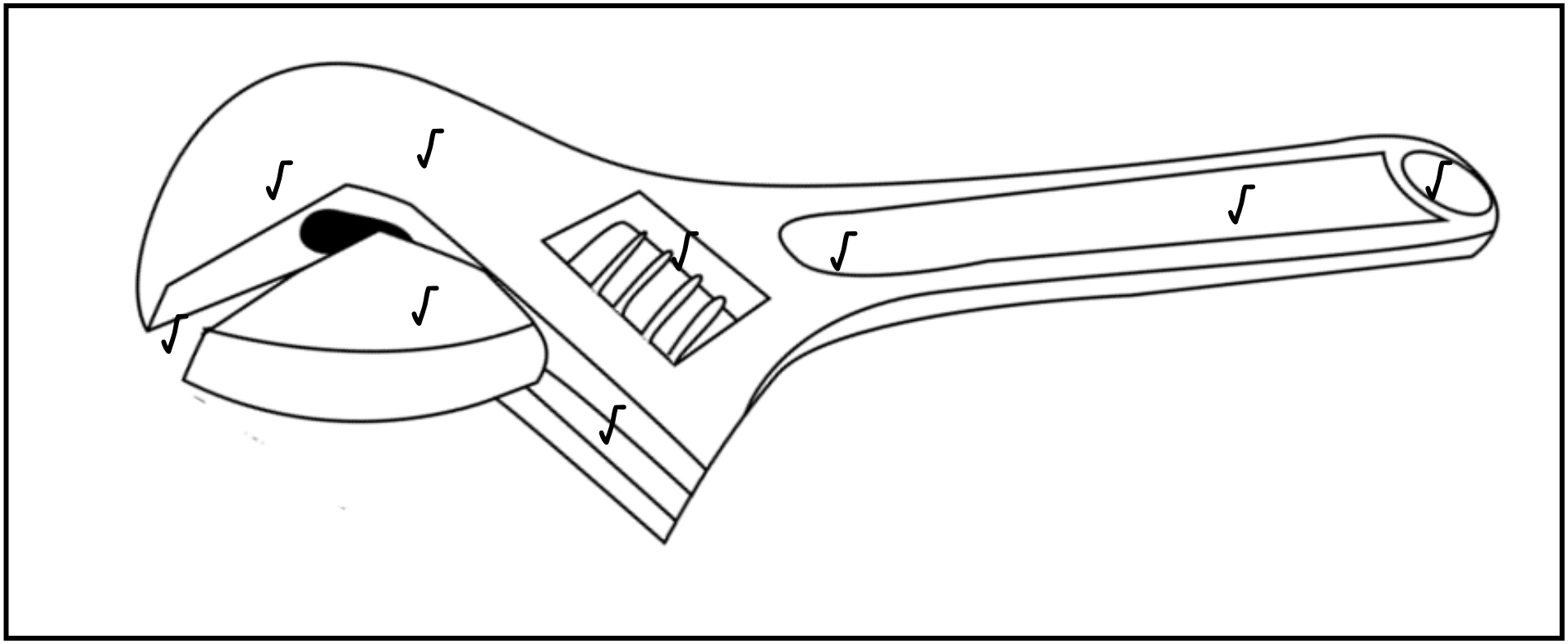

Correctness	5
Line work	2
Accuracy	2
TOTAL:	**9**

[9]

QUESTION 3: REPRODUCTION DRAWING

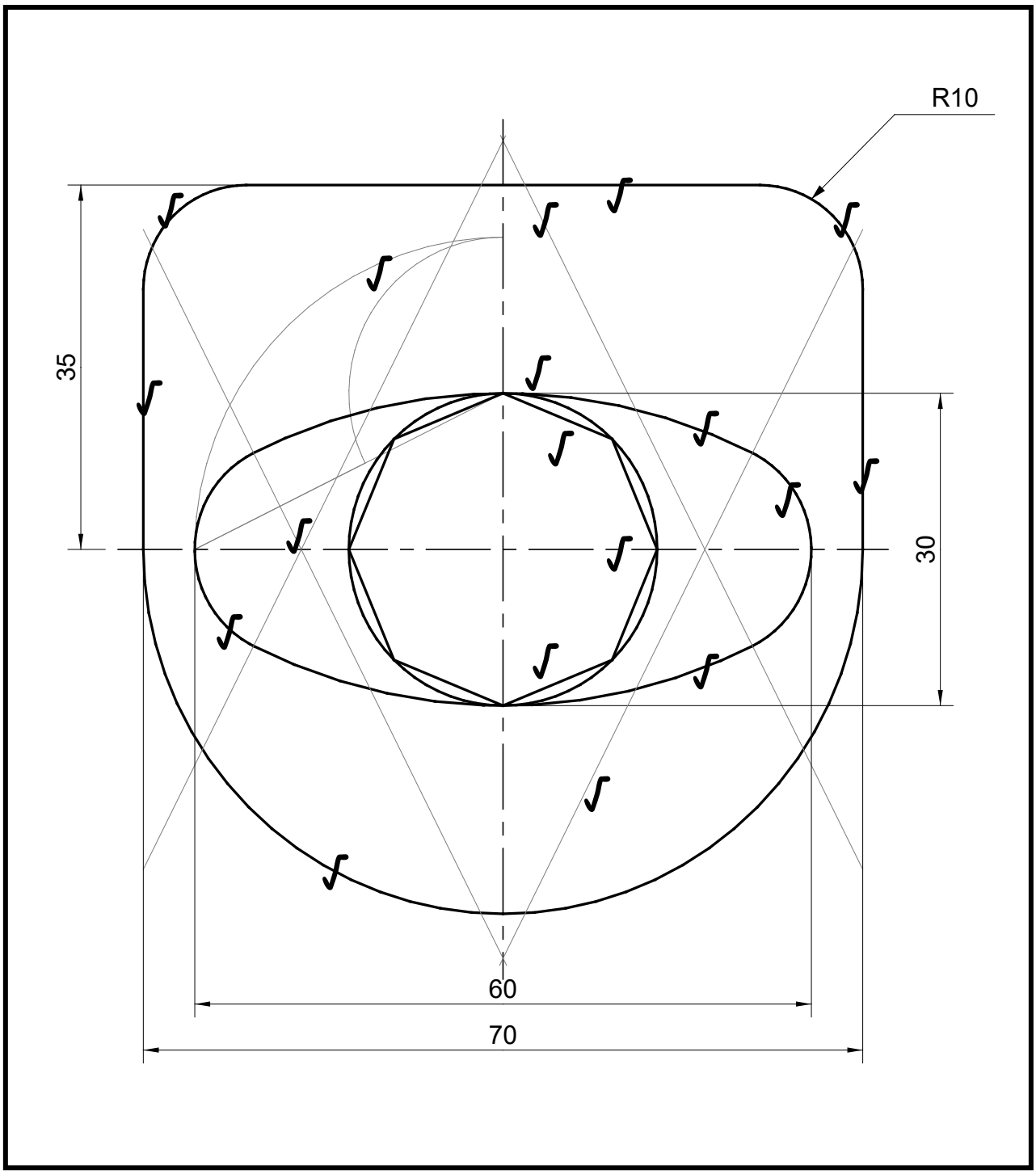

Construction of ellipse		**4**
Two construction arcs	½	
Bisecting the line	½	
Construct the V	½	
Construct the upside-down V	½	
½ mark for each of the four curves forming the ellipse	2	
Construction of octagon		**2**
Inscribed circle	½	
Octagon	1½	
Blended arcs (½ each)		**1**
Semicircle		**½**
Three straight lines		**1½**
Line work		**2**
Accuracy		**2**
Any two dimensions (true dimensions)		**1**
TOTAL:		**14**

[14]

QUESTION 4: FIRST-ANGLE ORTHOGRAPHIC PROJECTION

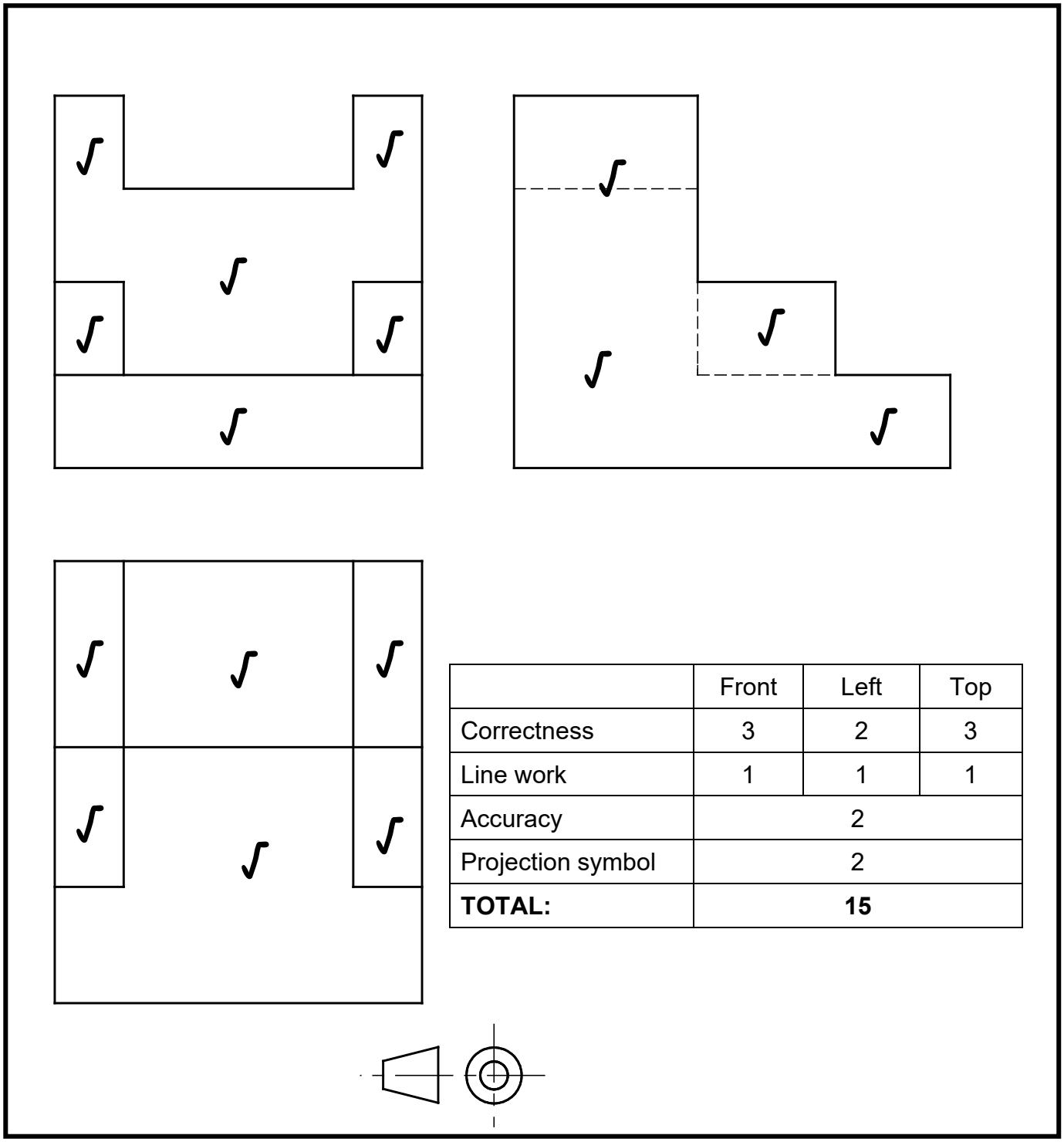

	Front	Left	Top
Correctness	3	2	3
Line work	1	1	1
Accuracy	2		
Projection symbol	2		
TOTAL:	**15**		

Front view		**3**
Front face of the base	½	
Front face of the 20 mm-high blocks	1	
Front face of the back portion	½	
Front face of the two protrusions of the back part	1	
Left view		**2**
½ mark for each of the three steps	1½	
½ mark for hidden detail	½	
Top view		**3**
Top face of the base	½	
Top face of the 2 × 20 mm-high blocks	1	
Top face of the two protruding parts	1	
Top face of the slot	½	

[15]

QUESTION 5: ISOMETRIC DRAWING

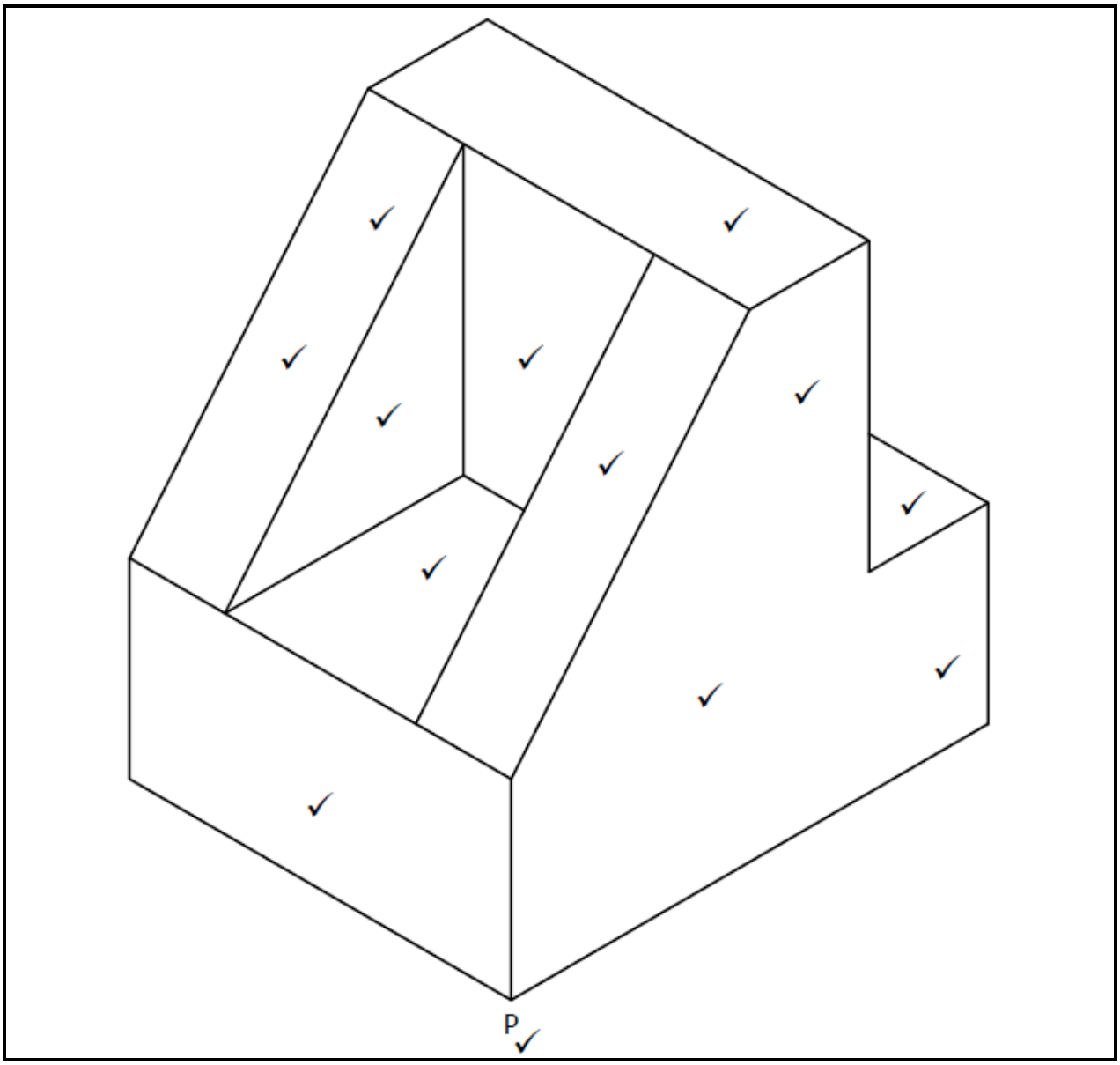

Correctness	12
Line work	3
Accuracy	2
Lowest point	1
TOTAL:	**18**

[18]

QUESTION 6: SECTIONAL DRAWING

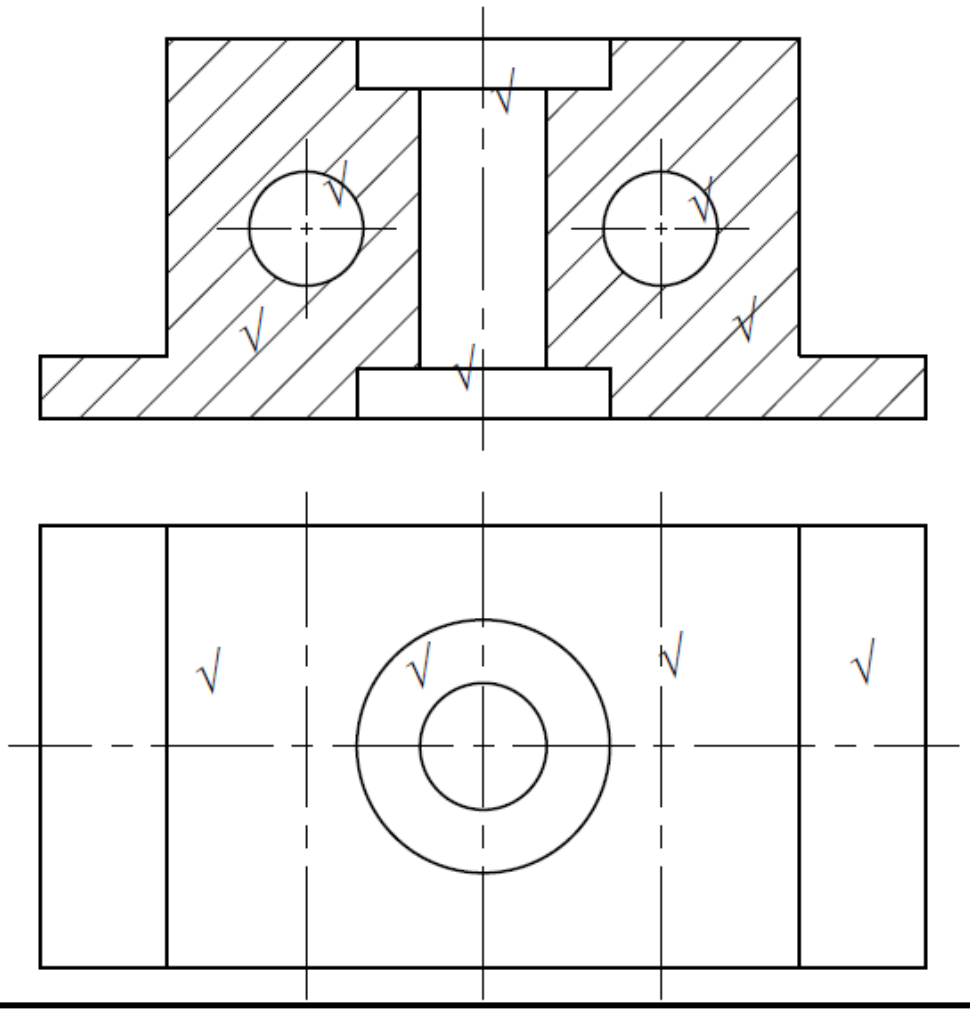

	Front	Left	Top
Correctness	3	2	2
Line work	1	1	1
Accuracy	1	1	1
Title and scale	2		
TOTAL	**15**		

CASTING

SCALE 1:1

Copyright reserved

Front view		**3**
Correct sectioning	1	
2 × Ø18 holes not sectioned	1	
Ø40 countersinking of Ø20 hole (both sides)	1	
Left view		**2**
Correct sectioning	1	
Ø40 countersinking of Ø20 hole (both sides)	1	
Top view		**2**
½ mark for each area shown	1½	
Base narrower than the top portion	½	

[15]

QUESTION 7: PRISMS AND PYRAMIDS

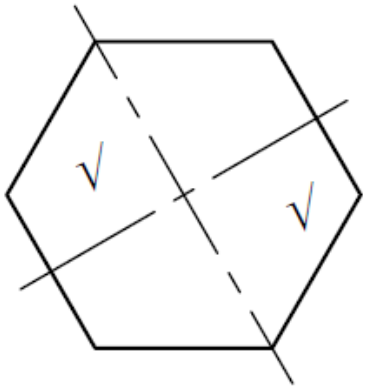

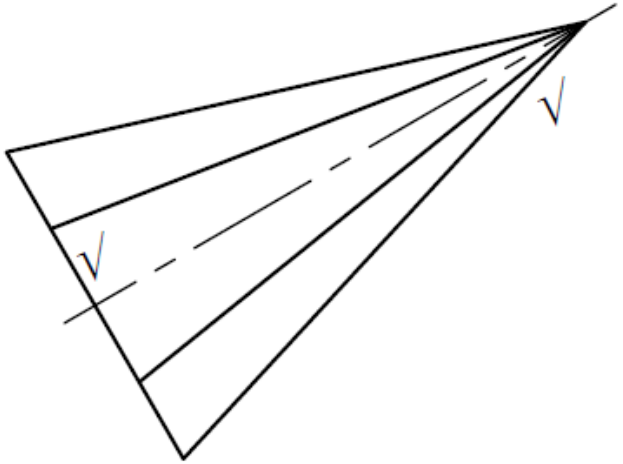

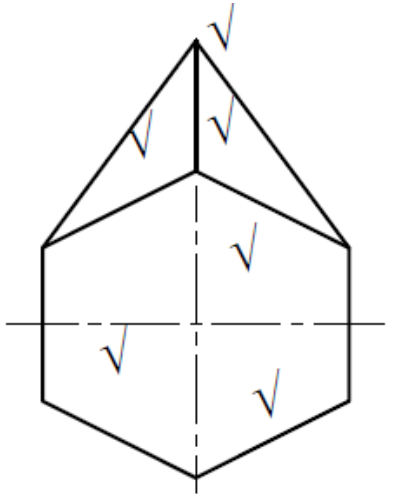

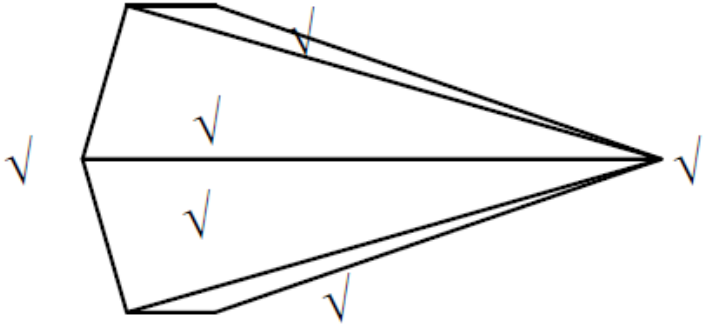

	Front	Left	Top
Correctness	2	3	3
Line work	1	1	1
Accuracy	1	1	1
TOTAL	**14**		

Copyright reserved

Given views		**2**
Front view	1	
Auxiliary view (hexagon)	1	
Left view		**3**
Bottom face	1½	
Two side faces that can be seen	1	
Apex	½	
Top view		**3**
Apex	½	
Four side faces that can be seen	2	
Bottom edge	½	

[14]

MARK ALLOCATION FOR DRAWING SHEET LAYOUT AND NEATNESS

ALL questions answered	1
Both sides of the DRAWING SHEET used	1
Questions correctly numbered	1
Only pencil used (including candidate information)	1
15 mm border on both sides of the DRAWING SHEET	2
Good planning/well-spaced out answers	2
General neatness of the DRAWING SHEET	2

[10]

TOTAL: 100

Copyright reserved