higher education & training

Department:
Higher Education and Training
REPUBLIC OF SOUTH AFRICA

MARKING GUIDELINE

NATIONAL CERTIFICATE

ENGINEERING DRAWING N1

1 April 2021

This marking guideline consists of 12 pages.

Copyright reserved

QUESTION 1: TERMS OF GENERAL ENGINEERING DRAWING

1.1 and 1.2

1.2.1	ASSEMBLY
1.2.2	HEX
1.2.3	Ø
1.2.4	TRIANGLE WITH ALL SIDES (OR ANGLES) EQUAL

(4 × 1 + 1 for drawing the block) **[5]**

QUESTION 2: FREEHAND DRAWING

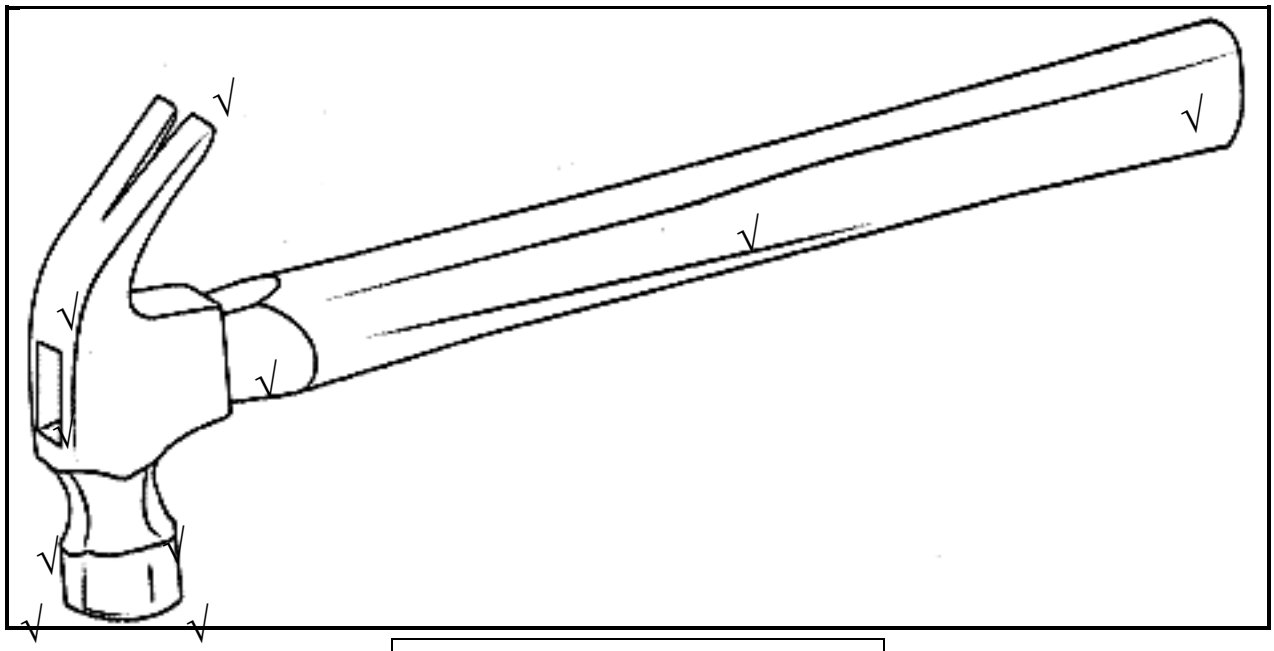

MARK ALLOCATION	
CORRECTNESS	5
LINE WORK	3
ACCURACY	2
TOTAL	**10**

MARK ALLOCATION FOR CORRECTNESS	
1 mark for the face	1
1 mark for the neck	1
½ mark for the hole in the hammer head	½
1 mark for the claw	1
½ mark for the profile of the handle where it joins the head	½
1 mark for the handle	1

[10]

QUESTION 3: GEOMETRICAL CONSTRUCTION/REPRODUCTION DRAWING

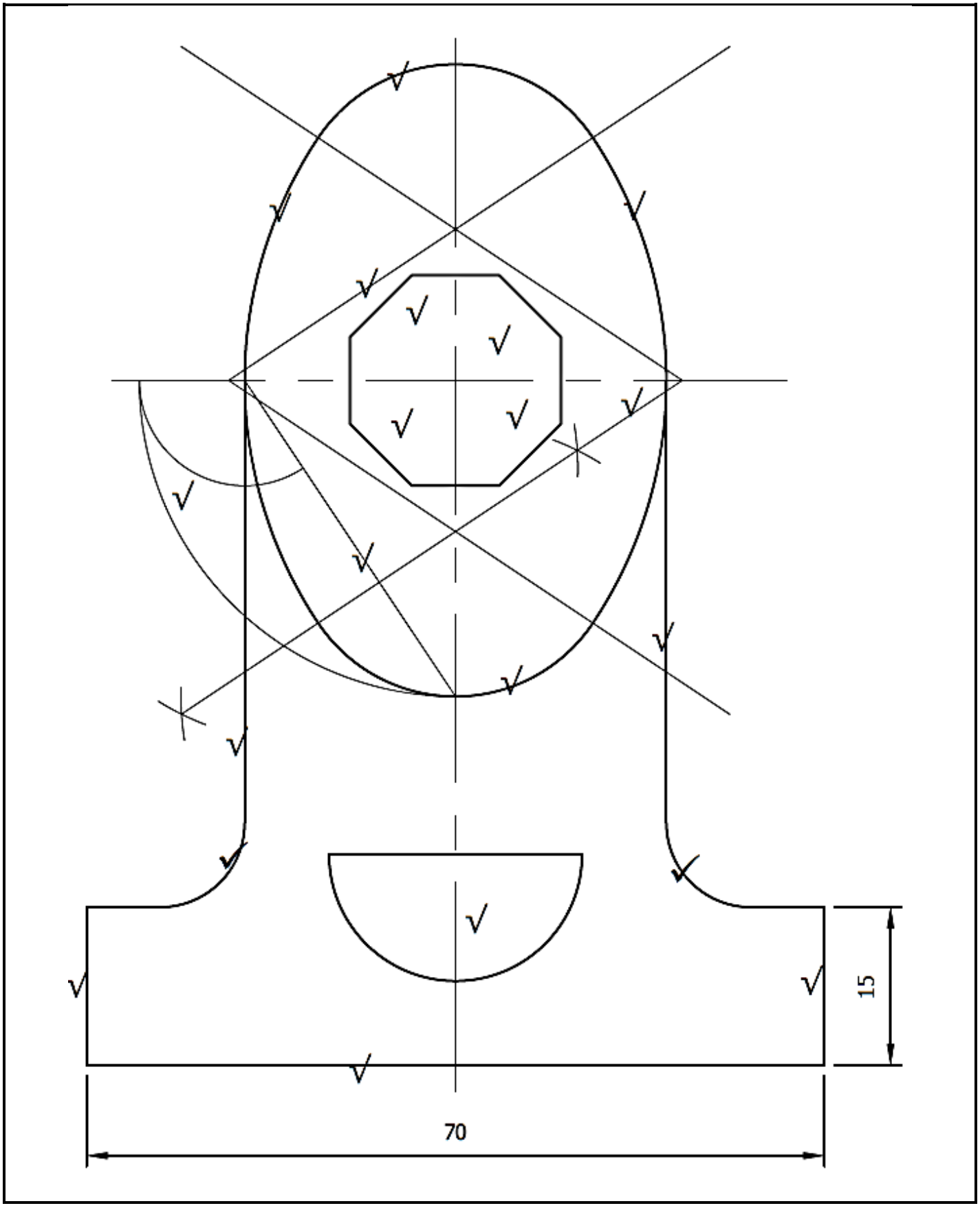

Copyright reserved

MARK ALLOCATION	
CORRECTNESS	11
LINE WORK	2
ACCURACY	2
DIMENSIONS	1
TOTAL	**16**

MARK ALLOCATION FOR CORRECTNESS		
Construction of the ellipse		**4**
Two construction arcs	½	
Bisecting the line	½	
Construct the V	½	
Construct the upside down V	½	
½ mark for each of the four curves forming the ellipse	2	
Construction of the octagon		**2**
Semicircular hole		**½**
Five straight lines - ½ mark each		**2½**
Blended arcs (2 × 1)		**2**

[16]

QUESTION 4: FIRST-ANGLE ORTHOGRAPHIC PROJECTION

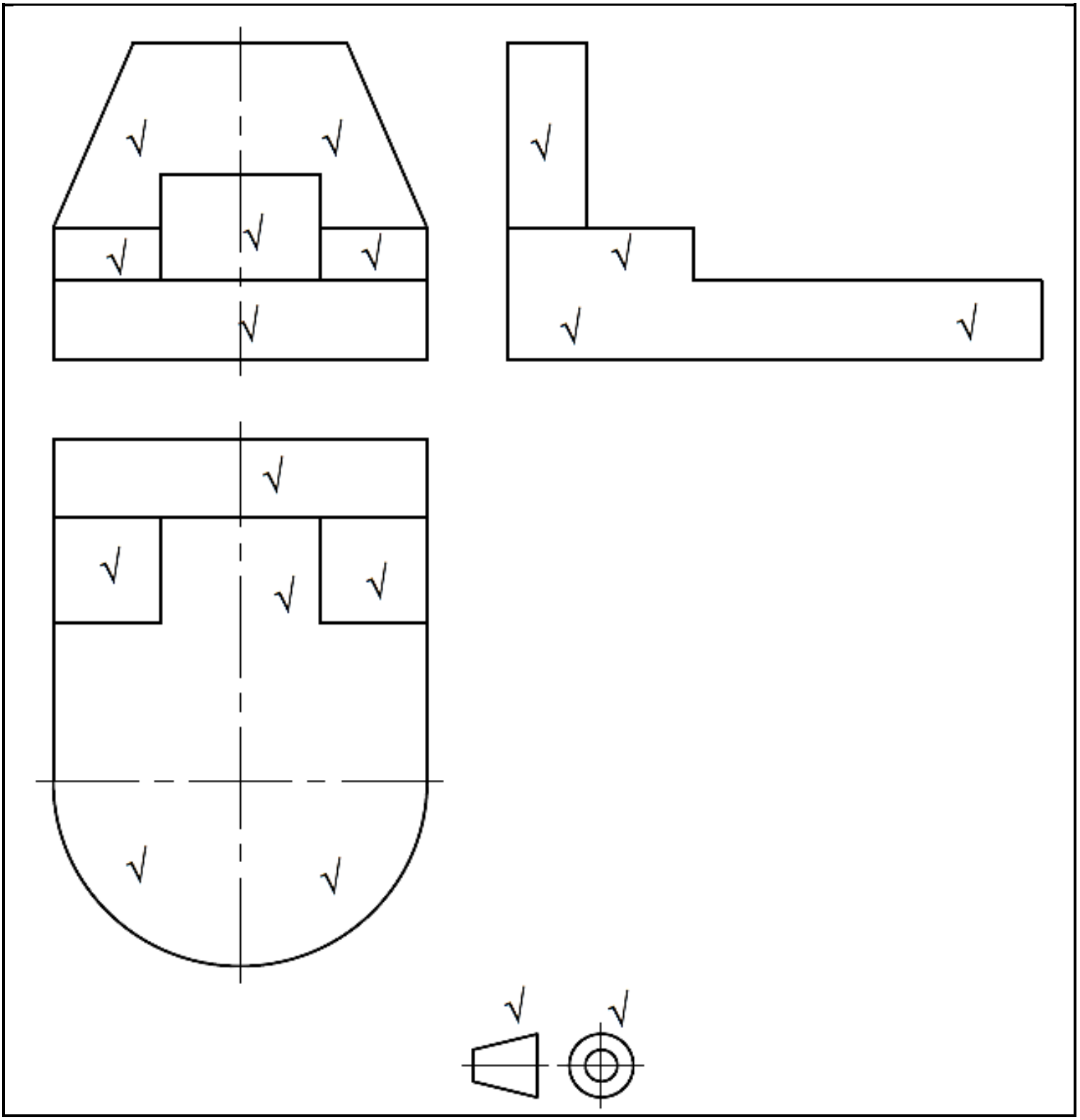

MARK ALLOCATION			
	FRONT	LEFT	TOP
CORRECTNESS	3	2	3
LINE WORK	1	1	1
ACCURACY	1	1	1
PROJECTION SYMBOL	1		
TOTAL	**15**		

MARK ALLOCATION FOR CORRECTNESS		
Front View		**3**
Front view of the base	½	
½ mark for each rectangular part resting on the base	1	
½ mark for gap	½	
The vertical upright	1	
Left View		**2**
Left view of the narrow part of the base	½	
Left view of the wider part of the base	1	
Left view of the vertical upright	½	
Top View		**3**
Top view of the base	1	
Top view of the gap	½	
½ mark for each block placed on the base	1	
Top view of the upright	½	

[15]

Copyright reserved

QUESTION 5: ISOMETRIC DRAWING

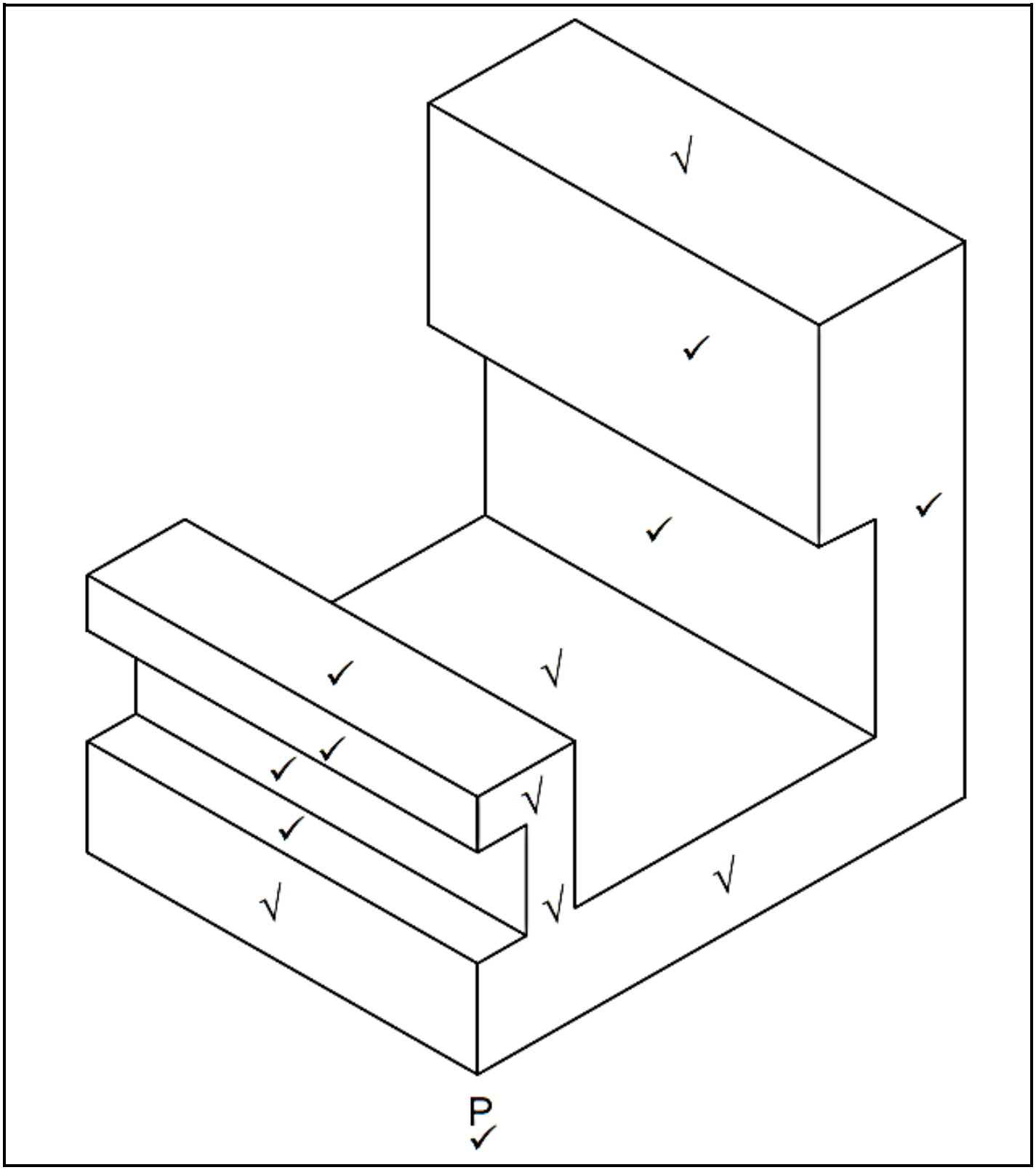

MARK ALLOCATION	
CORRECTNESS	10
LINE WORK	3
ACCURACY	3
LOWEST POINT P	1
TOTAL	**17**

MARK ALLOCATION FOR CORRECTNESS	
Base	½
Upright with the wider area	1
Upside down L-shape at the front of the component	1
Left view of the base	½
4 marks for the left view of the recessed portion (as shown)	4
Left view of the narrow upright	1
Left view of the wider part of the upright	1
Top view of the base	½
Top view of the upright	½

[17]

QUESTION 6: SECTIONAL DRAWING

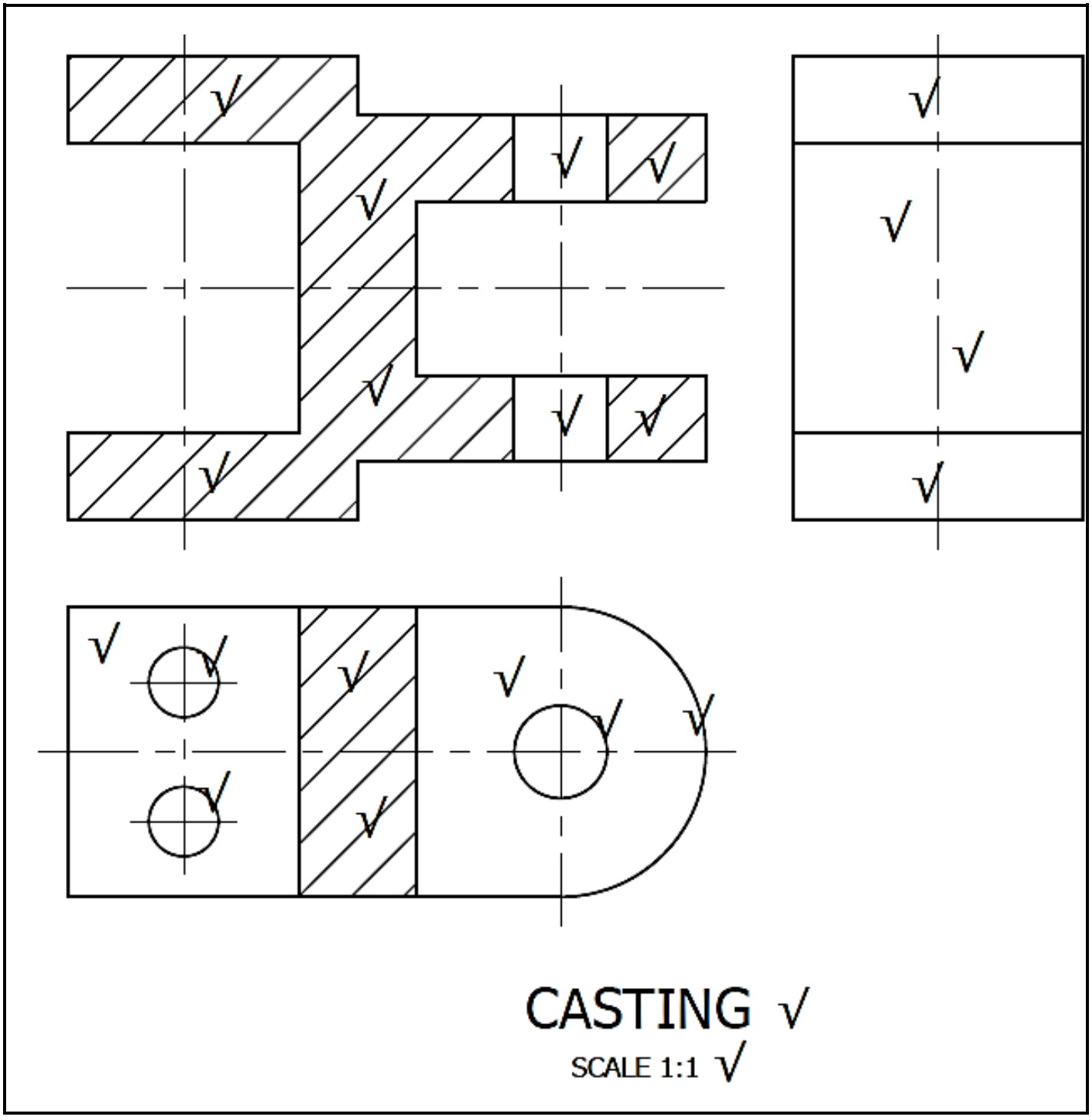

MARK ALLOCATION			
	FRONT	TOP	LEFT
CORRECTNESS	4	4	2
LINE WORK	1	1	1
ACCURACY	1	1	1
TITLE AND SCALE	1		
TOTAL	**17**		

MARK ALLOCATION FOR CORRECTNESS		
Full Sectional Front View		**4**
Correct sectioning	3	
½ mark for each hole not sectioned	1	
Full Sectional Top View		**4**
Correct sectioning	1	
½ mark for each hole not sectioned	1½	
½ mark for the area on the left not sectioned	½	
½ mark for the area on the right not sectioned	½	
½ for the R23 arc	½	
Left View		**2**
½ mark for each 50 × 15 rectangle	1	
1 mark for the 50 × 50 square	1	

[17]

QUESTION 7: PRISMS AND PYRAMIDS

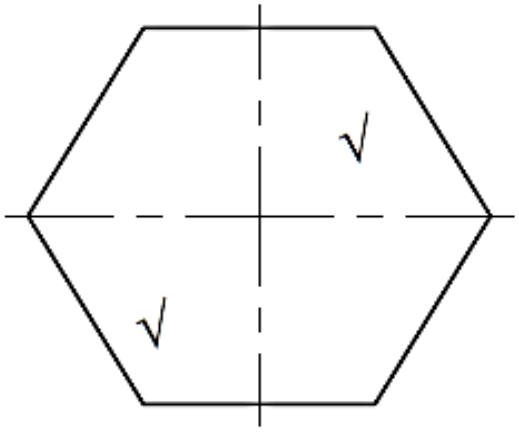

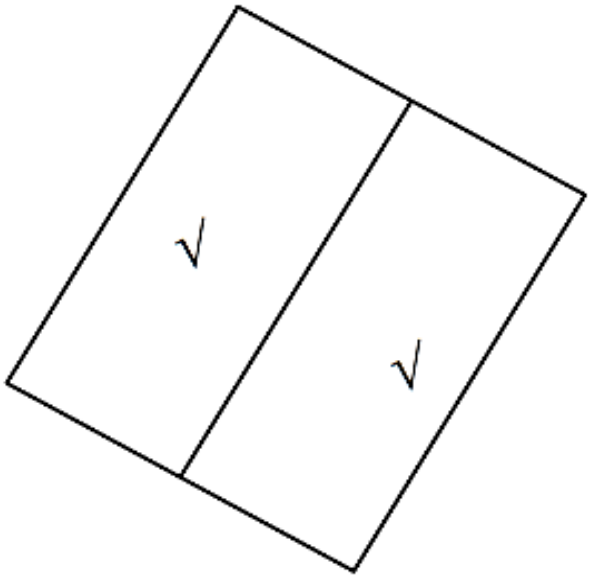

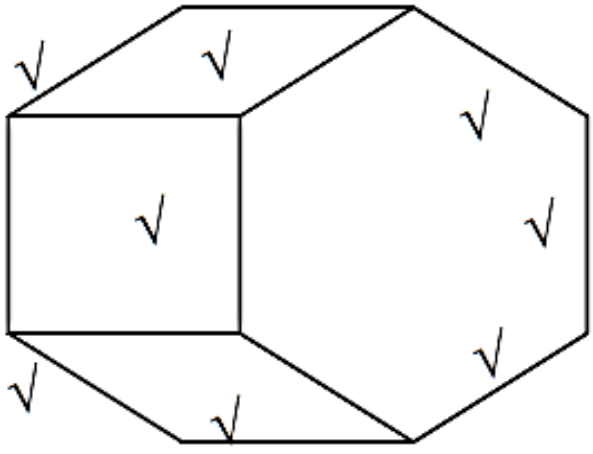

MARK ALLOCATION		
	FRONT/ AUXILIARY	TOP
CORRECTNESS	2	4
LINE WORK	1	1
ACCURACY	1	1
TOTAL	**10**	

MARK ALLOCATION FOR CORRECTNESS		
Front/Auxiliary Views		**2**
1 mark for the hexagon on the auxiliary view	1	
1 mark for the front view of the hexagon	1	
Top View		**4**
½ mark for each line/part as shown	4	

[10]

MARK ALLOCATION FOR BALANCED LAYOUT AND NEATNESS OF THE DRAWING SHEET	
All questions answered	1
Questions correctly numbered	1
All drawings done in pencil	1
Both sides of the drawing sheet used	1
15 mm border drawn on both sides of the drawing sheet	2
Good planning/well-spaced answers	2
General neatness of the drawing sheet	2
TOTAL	**10**

[10]

TOTAL: 100

Copyright reserved