higher education & training

Department:
Higher Education and Training
REPUBLIC OF SOUTH AFRICA

NATIONAL CERTIFICATE

ENGINEERING DRAWING N1

(8090261)

31 March 2020 (X-paper)
09:00–13:00

REQUIREMENTS: ONE A2 drawing sheet

This question paper consists of 8 pages.

022Q1A2031

Copyright reserved

DEPARTMENT OF HIGHER EDUCATION AND TRAINING
REPUBLIC OF SOUTH AFRICA

NATIONAL CERTIFICATE
ENGINEERING DRAWING N1
TIME: 4 HOURS
MARKS: 100

INSTRUCTIONS AND INFORMATION

1. Answer all the questions.
2. Read all the questions carefully.
3. Number the answers according to the numbering system used in this question paper.
4. Use both sides of the DRAWING SHEET.
5. Draw a 15 mm border on both sides of the DRAWING SHEET.
6. Do only the candidate information in ink. Do all other drawing work in pencil.
7. All drawing work must conform to the latest SANS 10111 Code of Practice for Engineering Drawing.
8. Work neatly.

Copyright reserved

QUESTION 1: GENERAL ENGINEERING-DRAWING TERMS

1.1

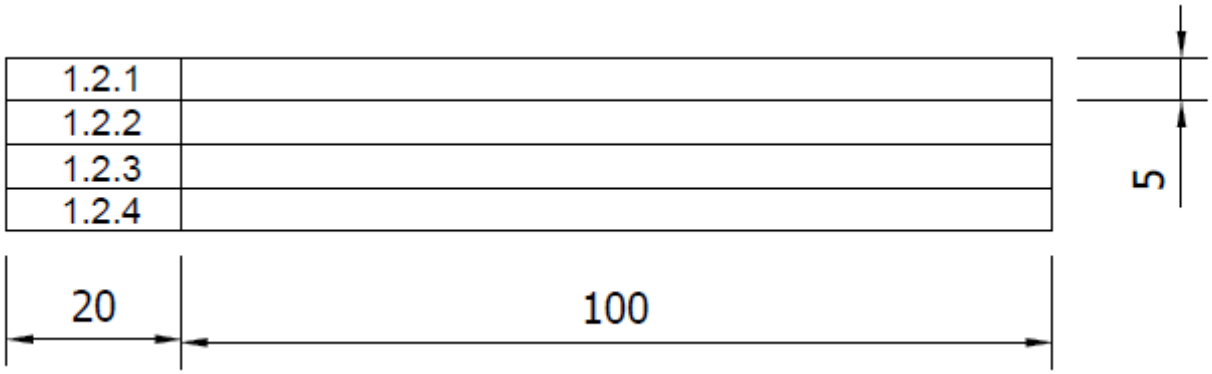

FIGURE 1

Draw the answer block in FIGURE 1 full sized on the DRAWING SHEET. (1)

1.2 Neatly print the abbreviations for each of the following terms in the answer block drawn in QUESTION 1.1:

1.2.1 Computer-aided draughting

1.2.2 Assembly

1.2.3 Across corners

1.2.4 Material

(4 × 1) (4)

[5]

QUESTION 2: FREEHAND DRAWING

FIGURE 2 shows a view of a hammer.

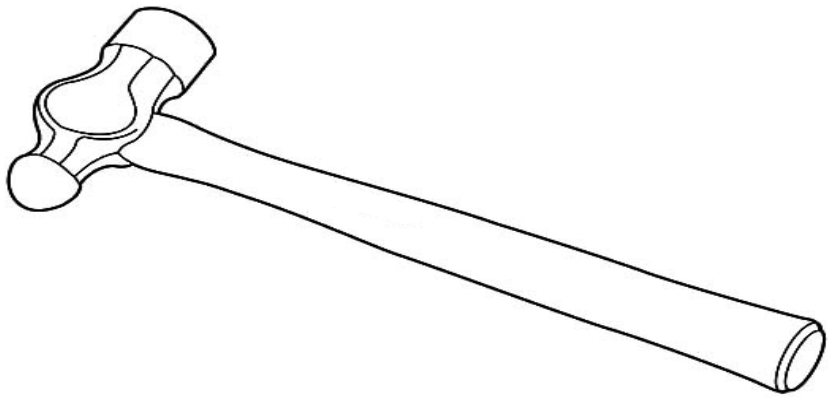

FIGURE 2

Use only a pencil and an eraser to draw the view of the hammer twice the given size in good proportion. **[10]**

Copyright reserved

QUESTION 3: REPRODUCTION DRAWING

FIGURE 3 shows a view of a cover plate.

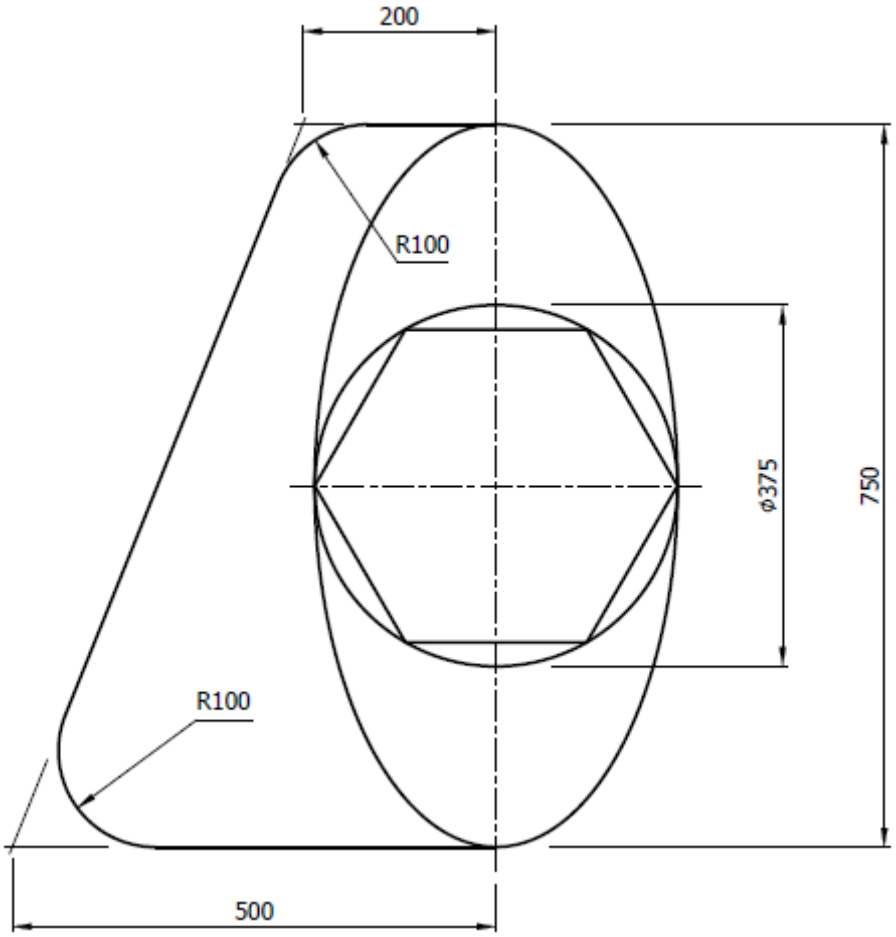

FIGURE 3

3.1 Draw, to scale 1:5, the given view of the cover plate. Use the four-centre method to construct the ellipse. Show all construction lines. (13)

3.2 Insert any TWO dimensions on the drawing. (1)

[14]

QUESTION 4: FIRST-ANGLE ORTHOGRAPHIC PROJECTION

FIGURE 4 shows an isometric view of a component.

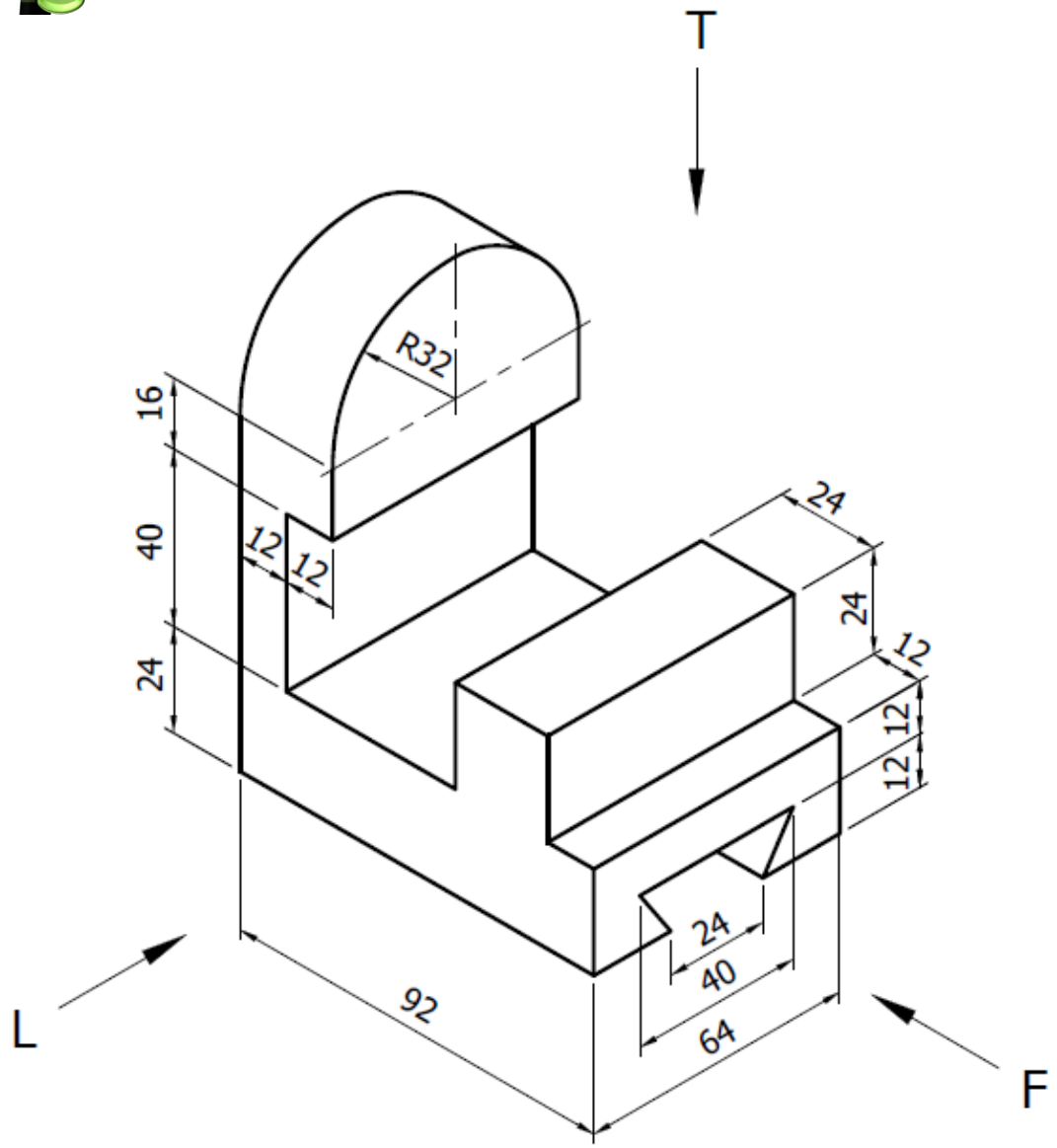

FIGURE 4

Draw, to scale 1:1, the following views of the component in first-angle orthographic projection without showing hidden detail:

4.1 A front view as seen in the direction of Arrow F (5)

4.2 A left view as seen in the direction of Arrow L (5)

4.3 A top view as seen in the direction of Arrow T (4)

4.4 Draw the symbol for first-angle orthographic projection beneath the layout. (2)

[16]

Copyright reserved

QUESTION 5: ISOMETRIC DRAWING

FIGURE 5 shows two primary views of a geometric model in first-angle orthographic projection.

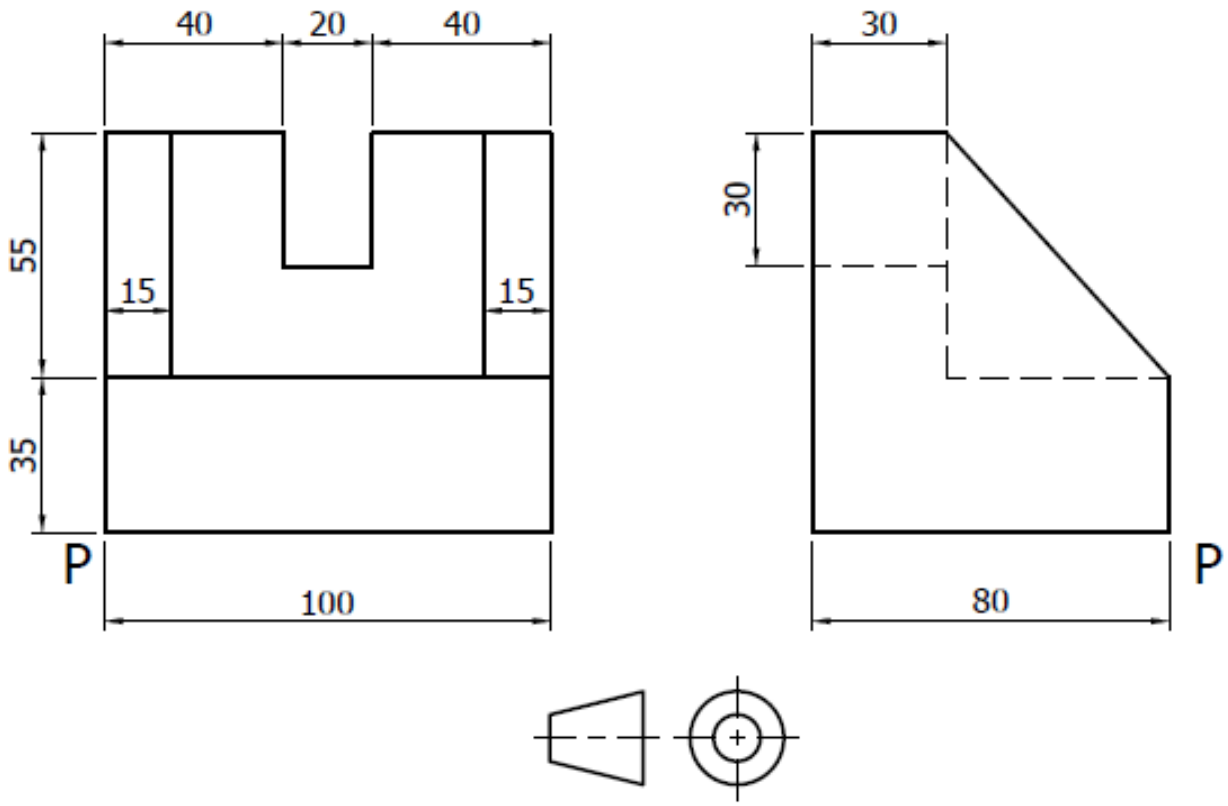

FIGURE 5

5.1 Draw, to scale 1:1, an isometric view of the model without showing hidden detail. (17)

5.2 Point P must be the lowest point on the drawing. (1)

[18]

QUESTION 6: SECTIONAL DRAWING

FIGURE 6 shows two primary views of a casting in first-angle orthographic projection.

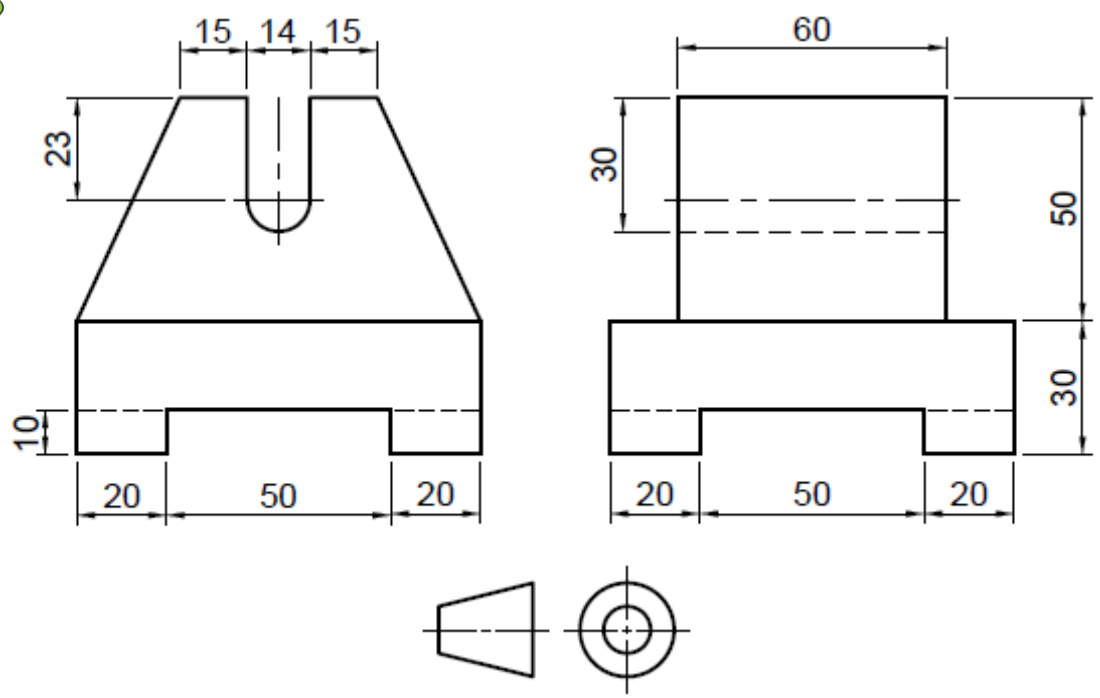

FIGURE 6

Draw, to scale 1:1, the following views of the casting in first-angle orthographic projection without showing hidden detail:

6.1 A full-sectional front view (6)

6.2 A full-sectional left view (5)

6.3 An outside top view (5)

6.4 Print the following title and scale centred beneath the layout:

CASTING
SCALE 1:1 (1)

[17]

QUESTION 7: PRISMS AND PYRAMIDS

FIGURE 7 shows the front and auxiliary views of a hexagonal prism.

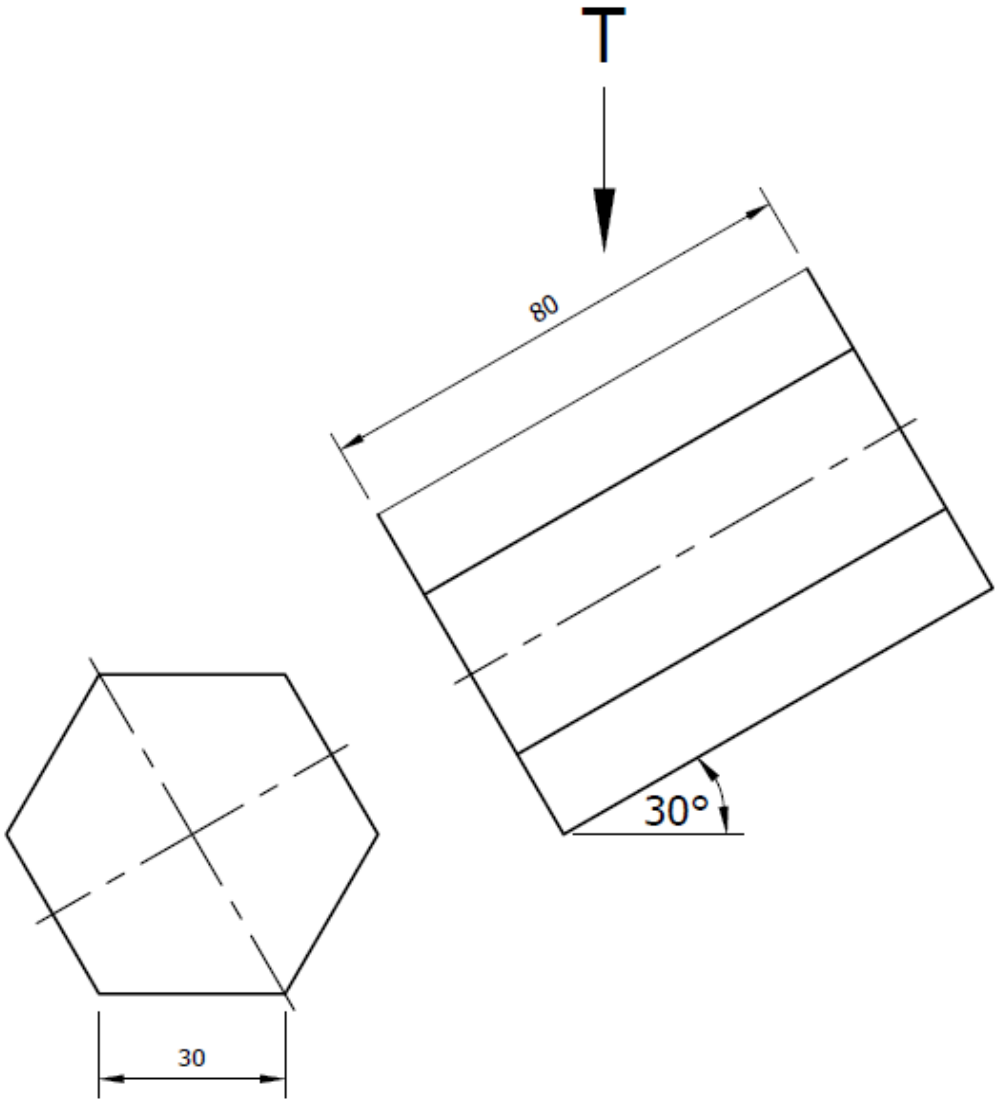

FIGURE 7

Draw, to scale 1:1, the following views of the hexagonal prism in first-angle orthographic projection without showing hidden detail:

7.1 The given front and auxiliary views (4)

7.2 A top view as seen in the direction of Arrow T (6)

[10]

QUESTION 8: LAYOUT AND NEATNESS

Balanced layout and neatness of the completed DRAWING SHEET. **[10]**

TOTAL: 100

Copyright reserved