higher education & training

Department:
Higher Education and Training
REPUBLIC OF SOUTH AFRICA

MARKING GUIDELINE

NATIONAL CERTIFICATE

ENGINEERING DRAWING N1

31 March 2020

This marking guideline consists of 13 pages.

Copyright reserved

QUESTION 1: GENERAL ENGINEERING-DRAWING TERMS

1.1 and 1.2

1.2.1	CAD
1.2.2	ASSY
1.2.3	A/C
1.2.4	MATL

(1 for answer block + 4 × 1) **[5]**

QUESTION 2: FREEHAND DRAWING

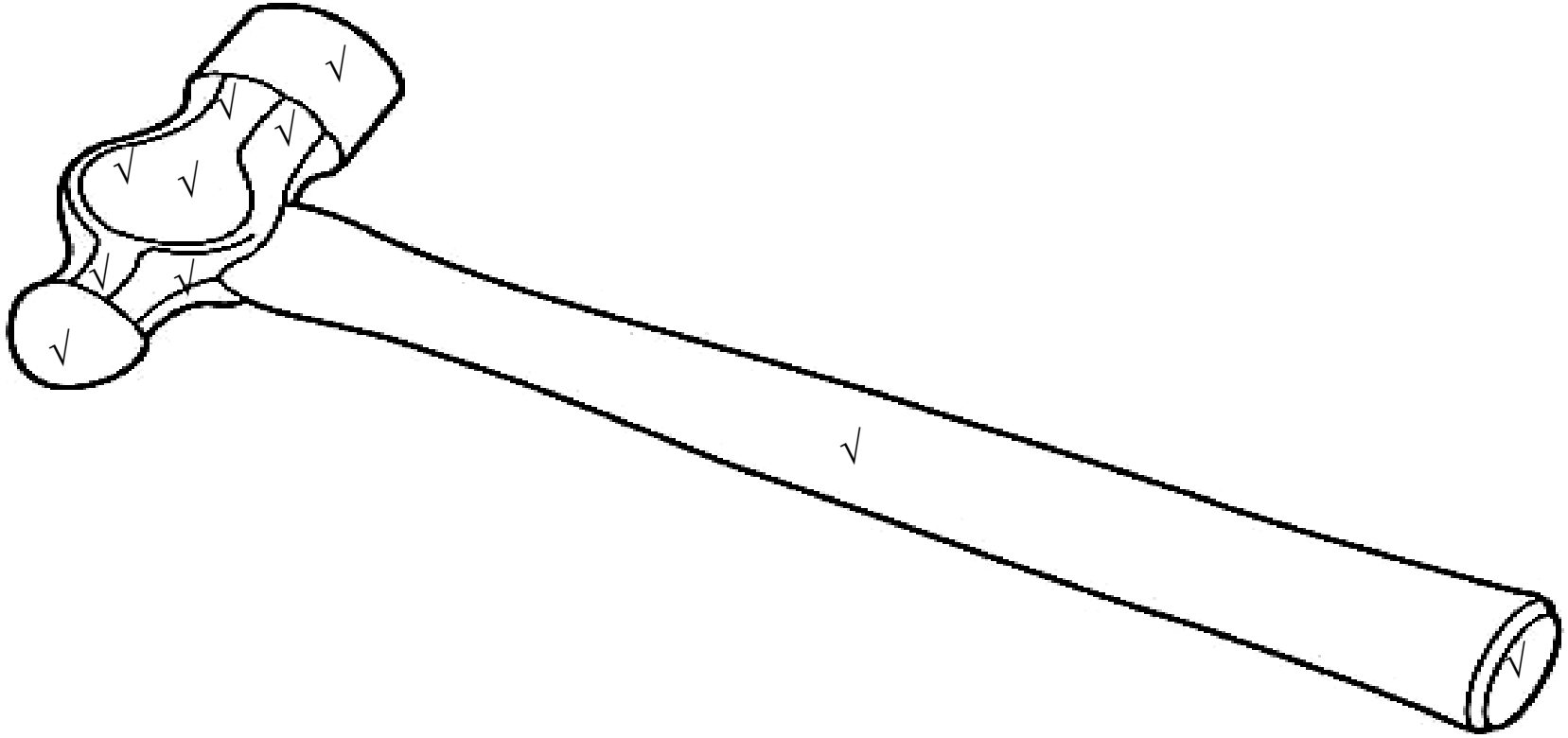

MARK ALLOCATION	
Correctness	5
Line work	3
Accuracy	2

[10]

QUESTION 3: REPRODUCTION DRAWING

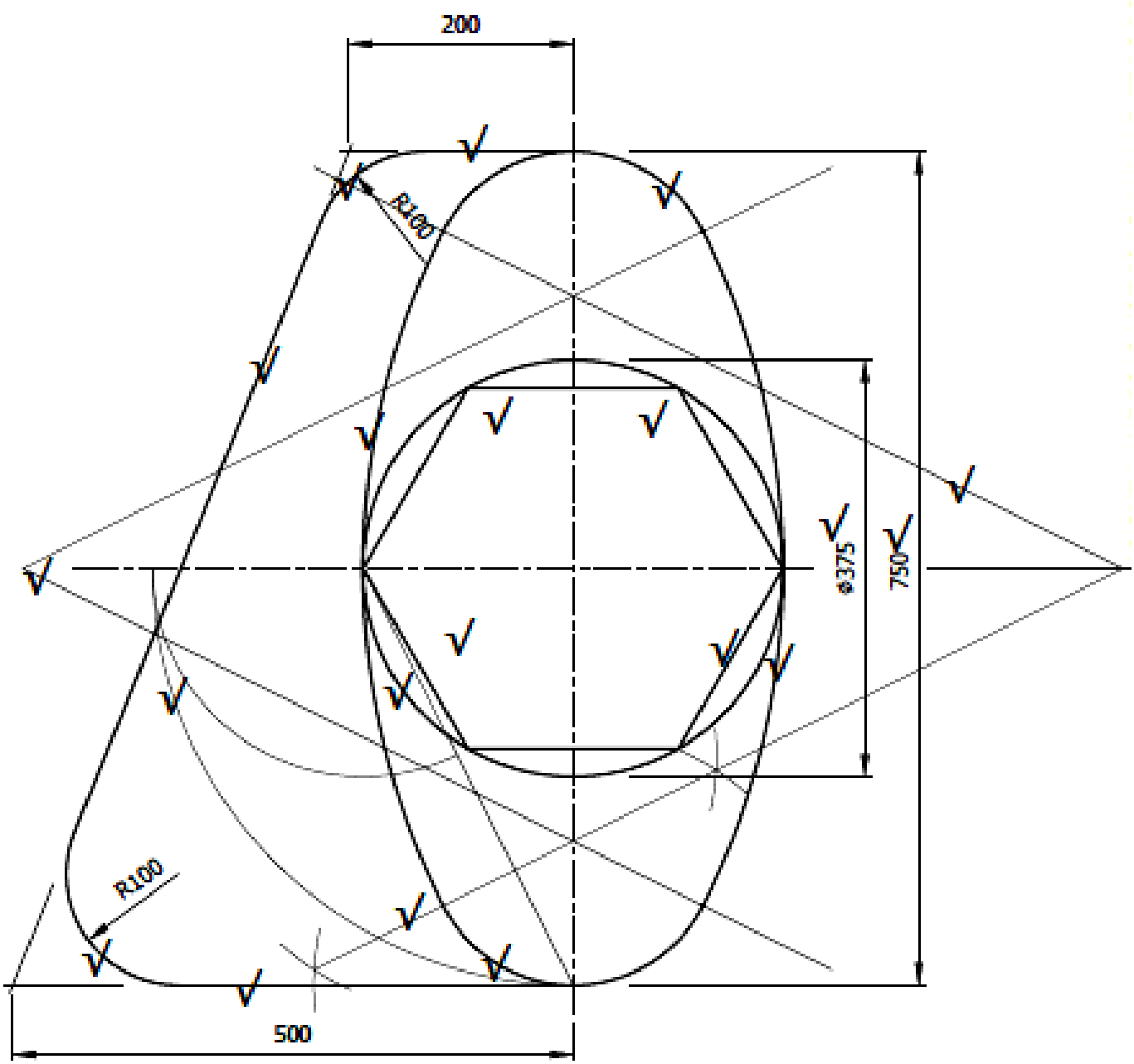

MARK ALLOCATION	
Correctness	9
Line work	2
Accuracy	2
Dimensions (2 × ½)	1

MARK ALLOCATION FOR CORRECTNESS		
Construction of the ellipse		**4**
Two construction arcs	½	
Bisect the line	½	
Construct the V	½	
Construct the upside down V	½	
½ mark for each of the four curves forming the ellipse	2	
Construction of the hexagon		**2**
Three straight lines (½ mark each)		**1½**
Blended arcs (½ mark each)		**1**
Circle Ø375		**½**

[14]

QUESTION 4: FIRST-ANGLE ORTHOGRAPHIC PROJECTION

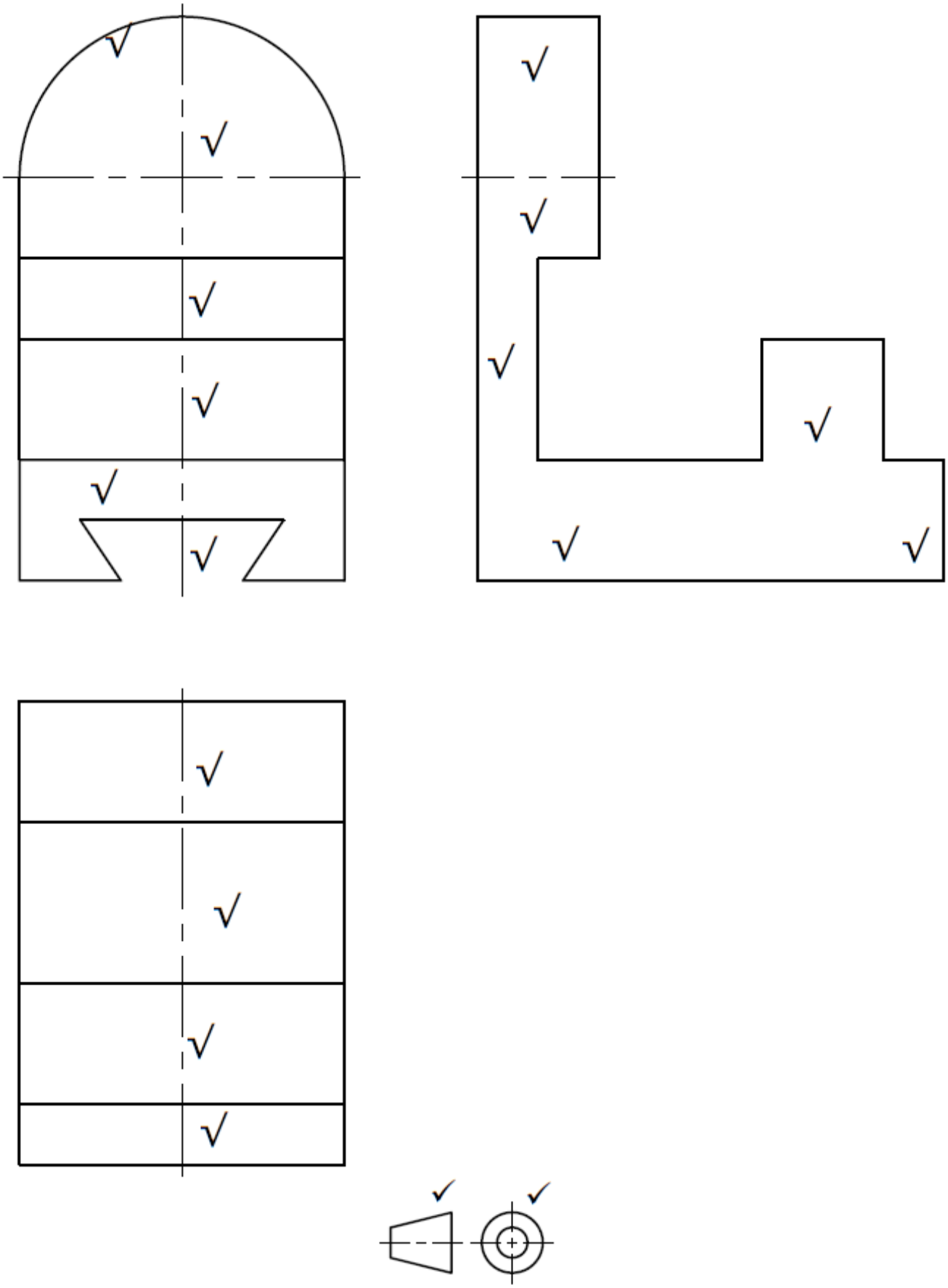

MARK ALLOCATION			
	Front	**Left**	**Top**
Correctness	3	3	2
Line work	1	1	1
Accuracy	1	1	1
Projection symbol	2		

MARK ALLOCATION FOR CORRECTNESS		
Front view		**3**
Front face of the base	½	
Dovetail slot	½	
½ mark for each rectangular area	1	
R32 semicircle	1	
Left view		**3**
Base	1	
Left view of the block placed on the base	½	
Vertical back	½	
Left view of the curved portion (seen as a rectangle)	1	
Top view		**2**
½ mark for each of the horizontal faces	2	

[16]

QUESTION 5: ISOMETRIC DRAWING

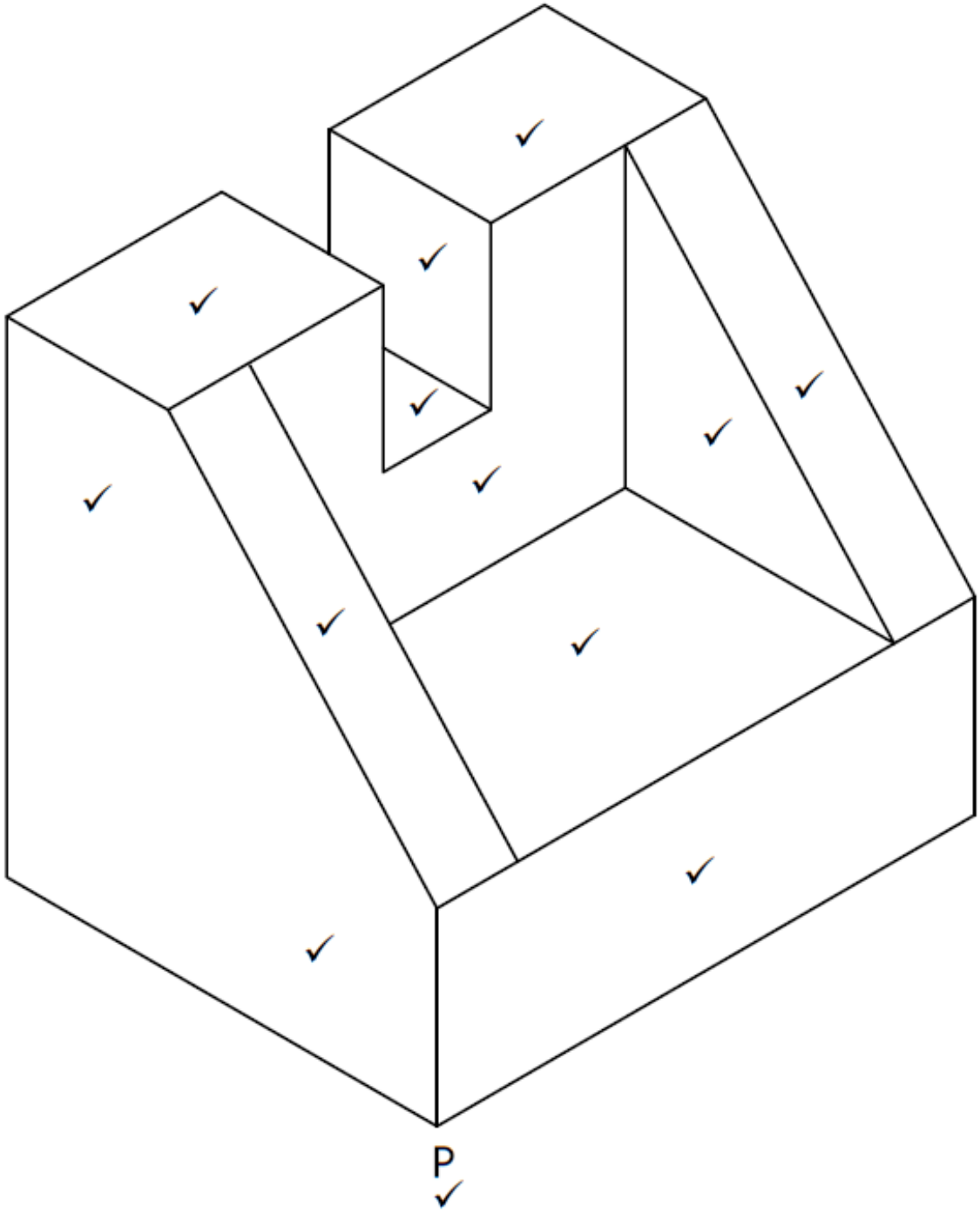

MARK ALLOCATION	
Correctness	12
Line work	3
Accuracy	2
Lowest point P	1

MARK ALLOCATION FOR CORRECTNESS	
Front face of the base	1
Left face with sloping front edge	2
Two sloping front faces	2
Triangular inner face	1
Top face of the base	1
Vertical face of the upright	1
Horizontal faces of the upright	2
Slot in the upright	2

[18]

QUESTION 6: SECTIONAL DRAWING

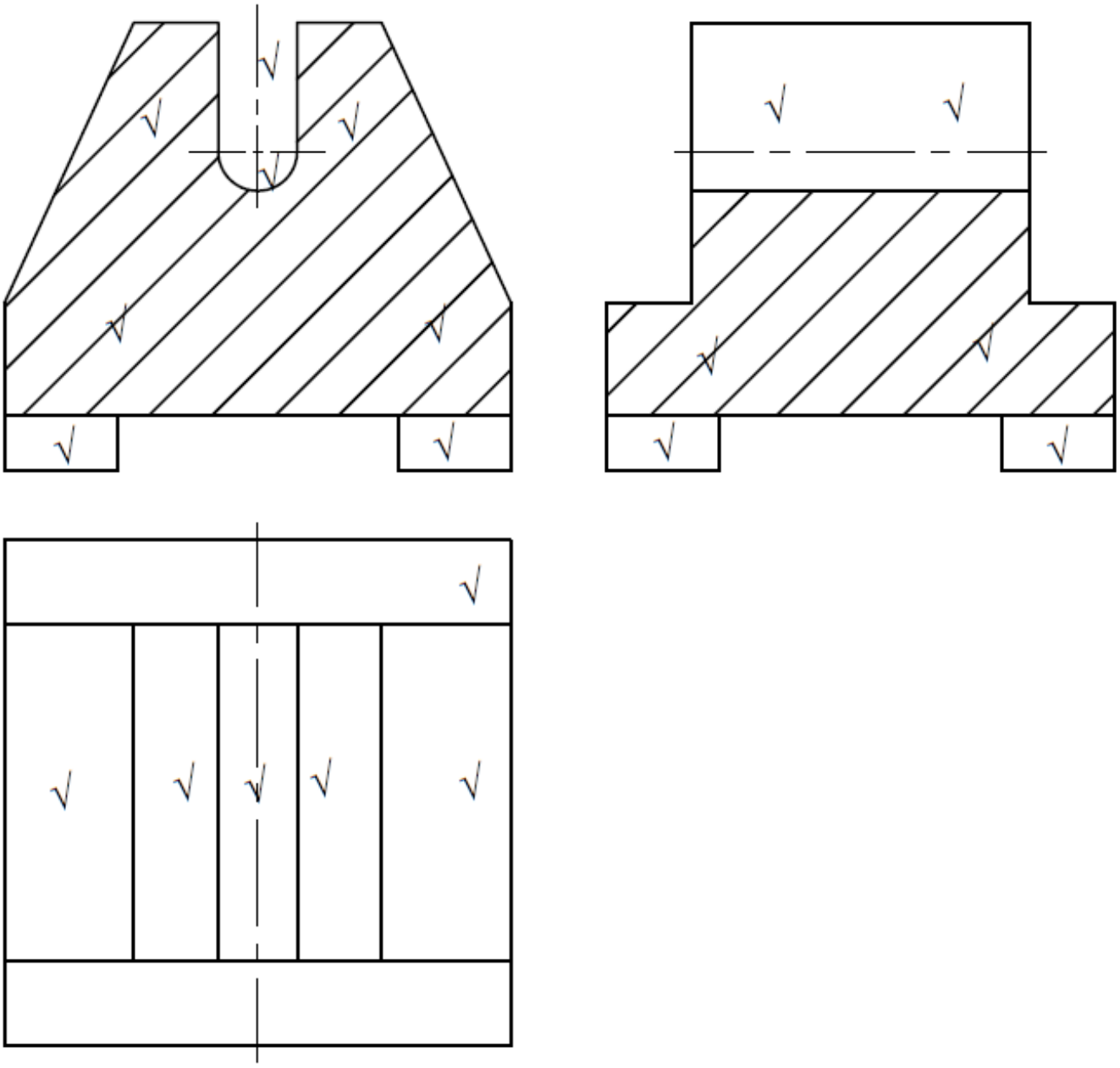

CASTING √

SCALE 1:1 √

MARK ALLOCATION			
	Front	**Left**	**Top**
Correctness	4	3	3
Line work	1	1	1
Accuracy	1	1	1
Title and scale	1		

MARK ALLOCATION FOR CORRECTNESS		
Full-sectional front view		**4**
Correct sectioning	2	
½ mark for each leg not sectioned	1	
Slot not sectioned	1	
Full-sectional left view		**3**
Correct sectioning	1	
Vertical part of the slot not sectioned	1	
½ mark for each leg not sectioned	1	
Top view		**3**
½ mark for each section of the top view as shown	3	

[17]

QUESTION 7: PRISMS AND PYRAMIDS

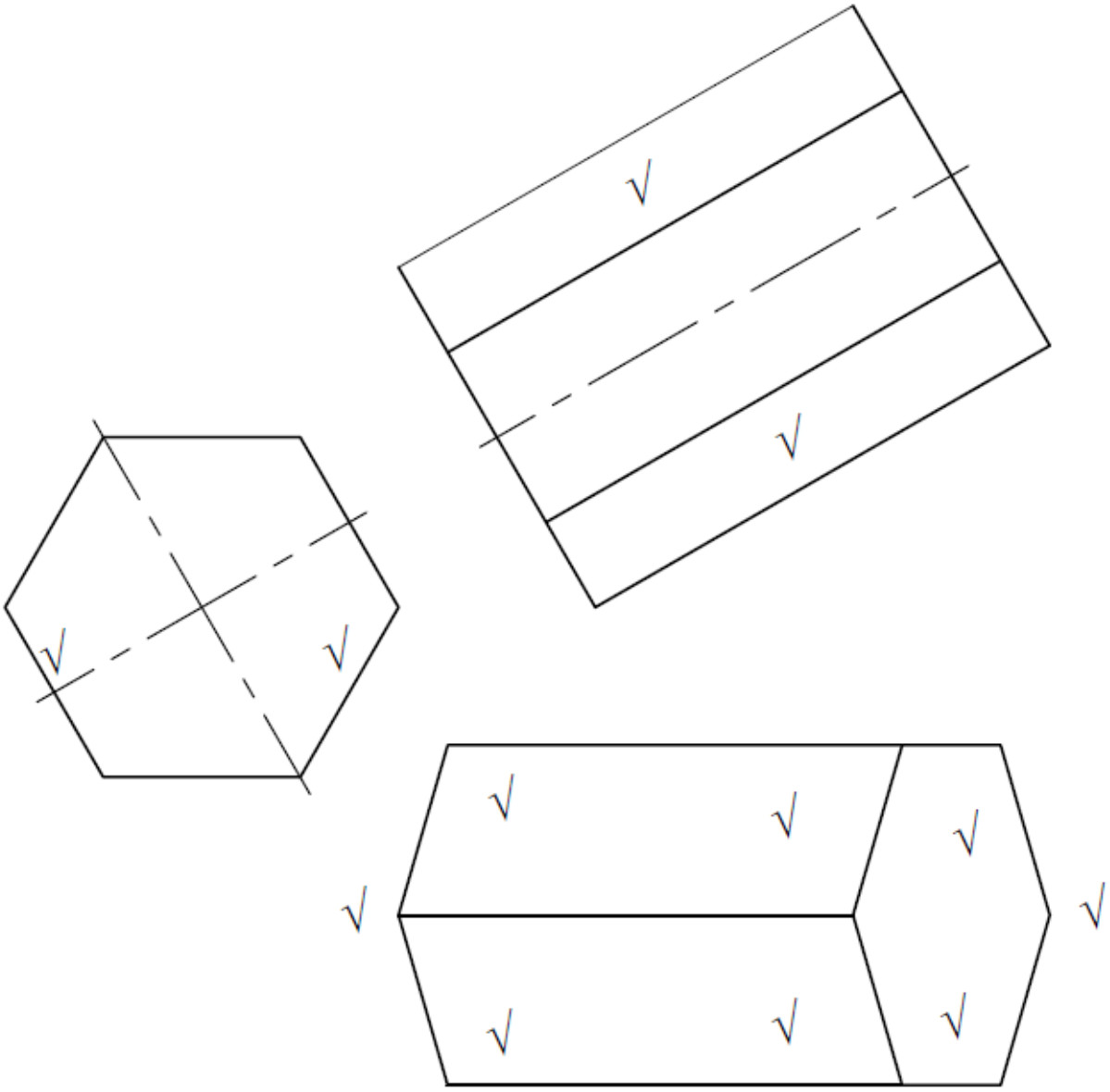

MARK ALLOCATION		
	Front	**Top**
Correctness	2	4
Line work	1	1
Accuracy	1	1

MARK ALLOCATION FOR CORRECTNESS		
Front/Auxiliary views		**2**
Construction of the hexagon (auxiliary view)	1	
½ mark for each edge of the hexagon on the front view	1	
Top view		**4**
1 mark for each face	3	
½ mark for the apex at each end of the drawing	1	

[10]

QUESTION 8: LAYOUT AND NEATNESS

MARK ALLOCATION FOR BALANCED LAYOUT AND NEATNESS OF THE DRAWING SHEET	
All questions answered	1
Questions correctly numbered	1
All drawings done in pencil	1
Both sides of the drawing sheet used	1
15 mm border drawn on both sides of the drawing sheet	2
Good planning/Well-spaced out answers	2
General neatness of the drawing sheet	2

[10]

TOTAL: 100

Copyright reserved