higher education & training

Department:
Higher Education and Training
REPUBLIC OF SOUTH AFRICA

T570**(E)**(M23)T

NATIONAL CERTIFICATE

ENGINEERING DRAWING N1

(8090261)

23 March 2018 (X-Paper)
09:00–13:00

REQUIREMENTS: ONE A2 drawing paper

This question paper consists of 8 pages.

ES

Copyright reserved

DEPARTMENT OF HIGHER EDUCATION AND TRAINING
REPUBLIC OF SOUTH AFRICA

NATIONAL CERTIFICATE
ENGINEERING DRAWING N1
TIME: 4 HOURS
MARKS: 100

INSTRUCTIONS AND INFORMATION

1. Answer ALL the questions.
2. Read ALL the questions carefully.
3. Number the answers according to the numbering system used in this question paper.
4. Use both sides of the drawing sheet.
5. A 15 mm border must be drawn on both sides of the drawing sheet.
6. ALL drawing work, including candidate information, must be done in pencil.
7. ALL drawing work must conform to the latest SANS 10111 Code of Practice for Engineering Drawing.
8. Work neatly.

Copyright reserved

QUESTION 1: GENERAL ENGINEERING DRAWING TERMS

1.1 Draw the answer block in FIGURE 1 in full size on the DRAWING SHEET.

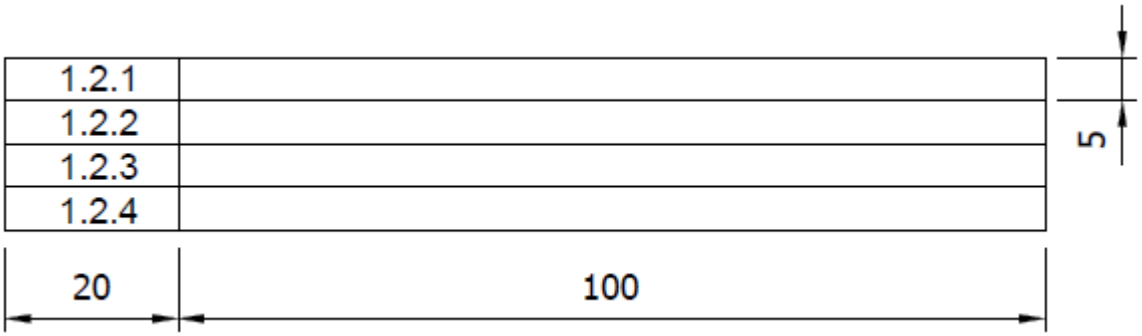

FIGURE 1 (1)

1.2 Neatly print each of the following abbreviations in full in the answer block drawn in QUESTION 1.1:

1.2.1 PCD

1.2.2 A/C

1.2.3 ASSY

1.2.4 CAD

(4 × 1) (4)
[5]

QUESTION 2: FREEHAND DRAWING

FIGURE 2 shows a view of a pair of pliers.

Use a pencil and an eraser and draw the view of the pliers in good proportion, twice the given size.

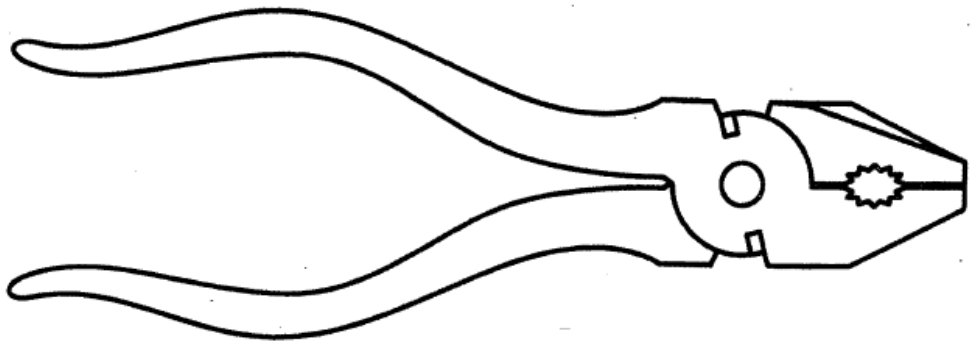

FIGURE 2 **[9]**

Copyright reserved

QUESTION 3: REPRODUCTION DRAWING

FIGURE 3 shows a view of a cover plate.

Draw the view of the cover plate to scale 1 : 2. Show ALL construction lines of the ellipse, using the four-centre method. (12)

Insert any TWO dimensions on the drawing. (1)

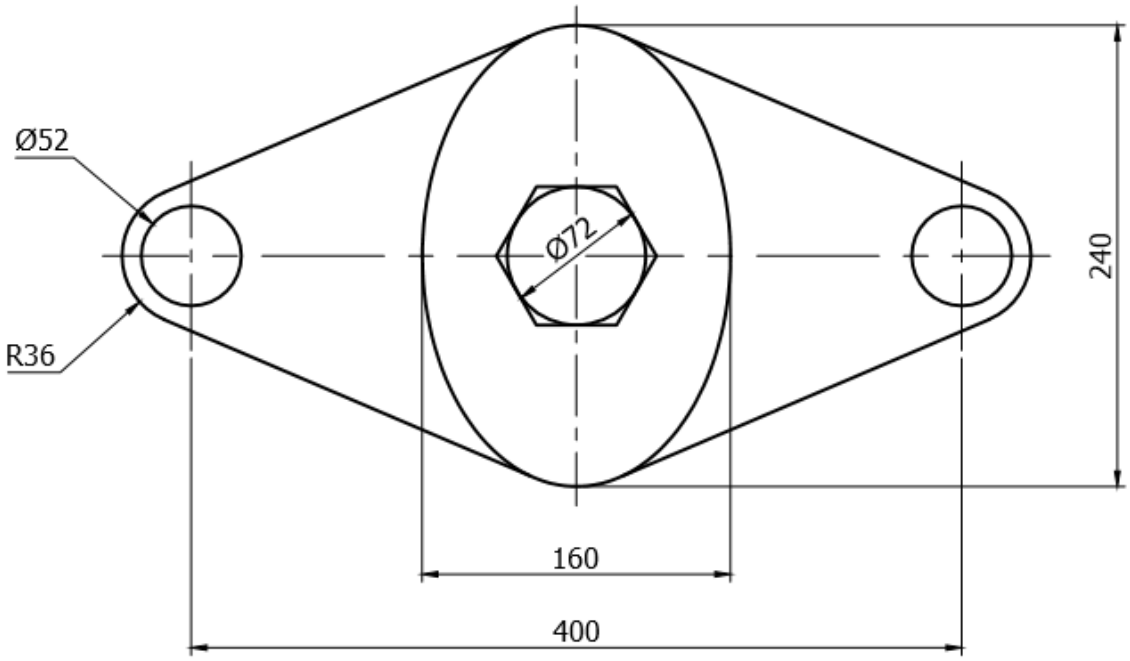

FIGURE 3 **[13]**

QUESTION 4: FIRST-ANGLE ORTHOGRAPHIC PROJECTION

FIGURE 4 shows an isometric view of a component.

Draw, to scale 1 : 1 and in first-angle orthographic projection, the following views of the component:

- Front view as seen in the direction of arrow F (5)
- Left view as seen in the direction of arrow L (4)
- Top view as seen in the direction of arrow T (4)

Draw the symbol for first-angle orthographic projection beneath the layout. (2)

No hidden detail is necessary.

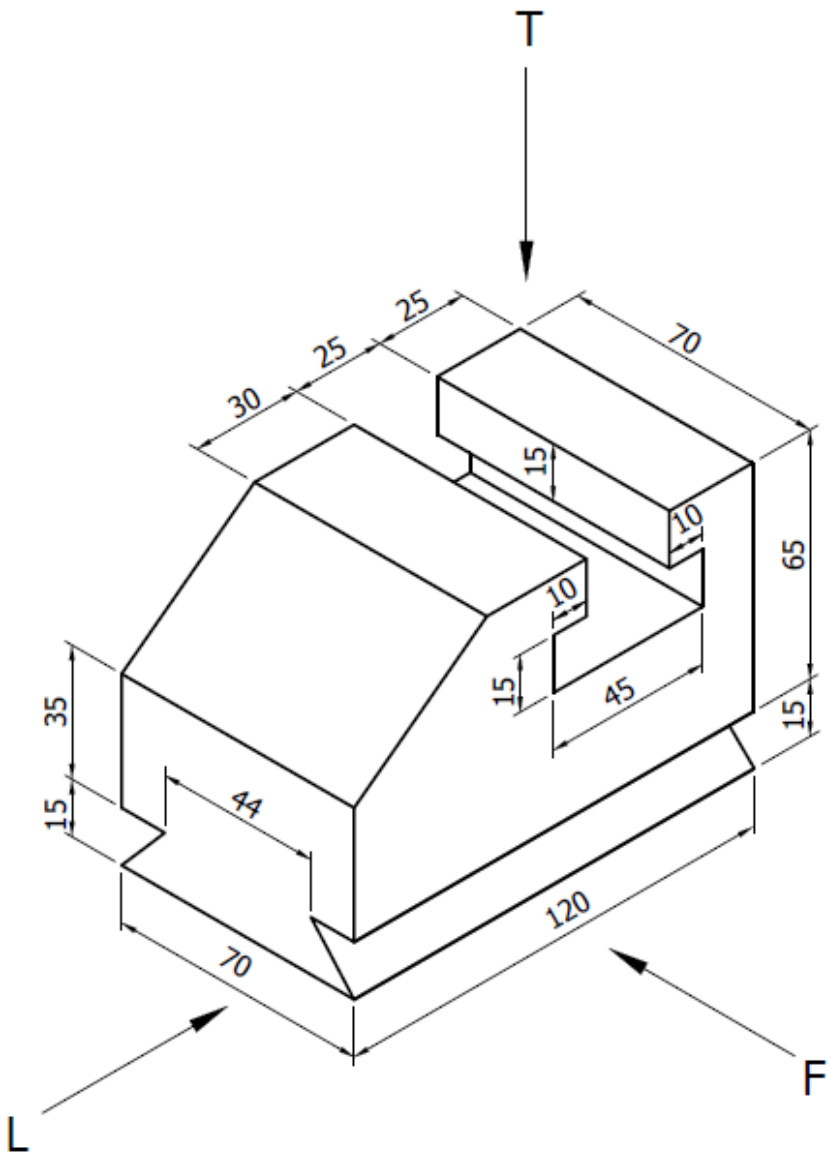

FIGURE 4 **[15]**

QUESTION 5: ISOMETRIC DRAWING

FIGURE 5 shows two primary views of a geometric model in first-angle orthographic projection.

Draw an isometric view of the model to scale 1 : 1.

Point P must be the lowest point on the drawing.

No hidden detail is necessary.

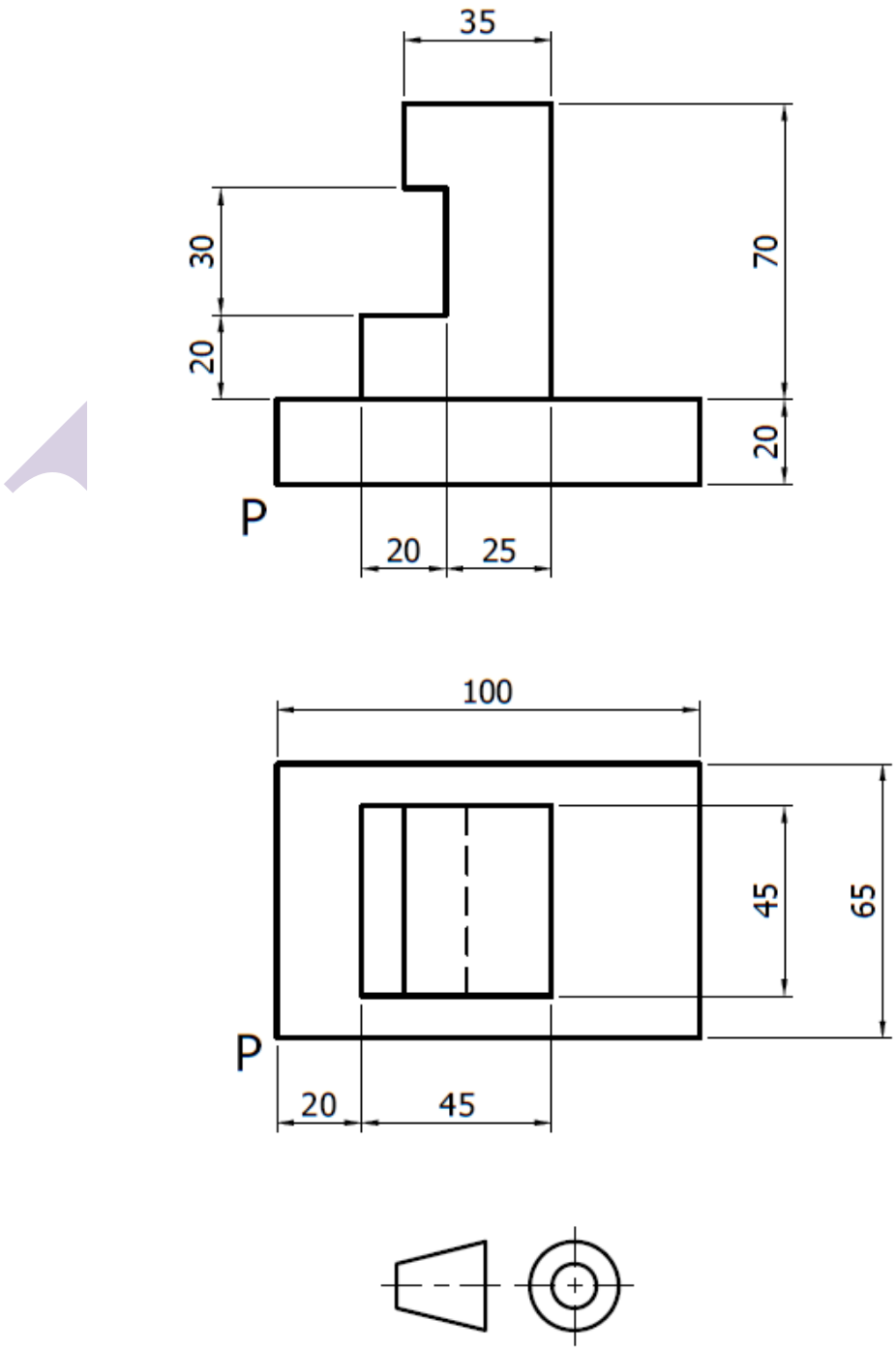

FIGURE 5 **[18]**

QUESTION 6: SECTIONAL DRAWING

FIGURE 6 shows two primary views of a casting in first-angle orthographic projection.

Draw, to scale 1 : 1 and in first-angle orthographic projection, the following views of the casting:

- Full-sectional front view (5)
- Full-sectional left view on cutting plane X-X (5)
- Outside top view (4)

Print the following title and scale beneath the drawing:

CASTING
SCALE 1 : 1 (2)

No hidden detail is necessary.

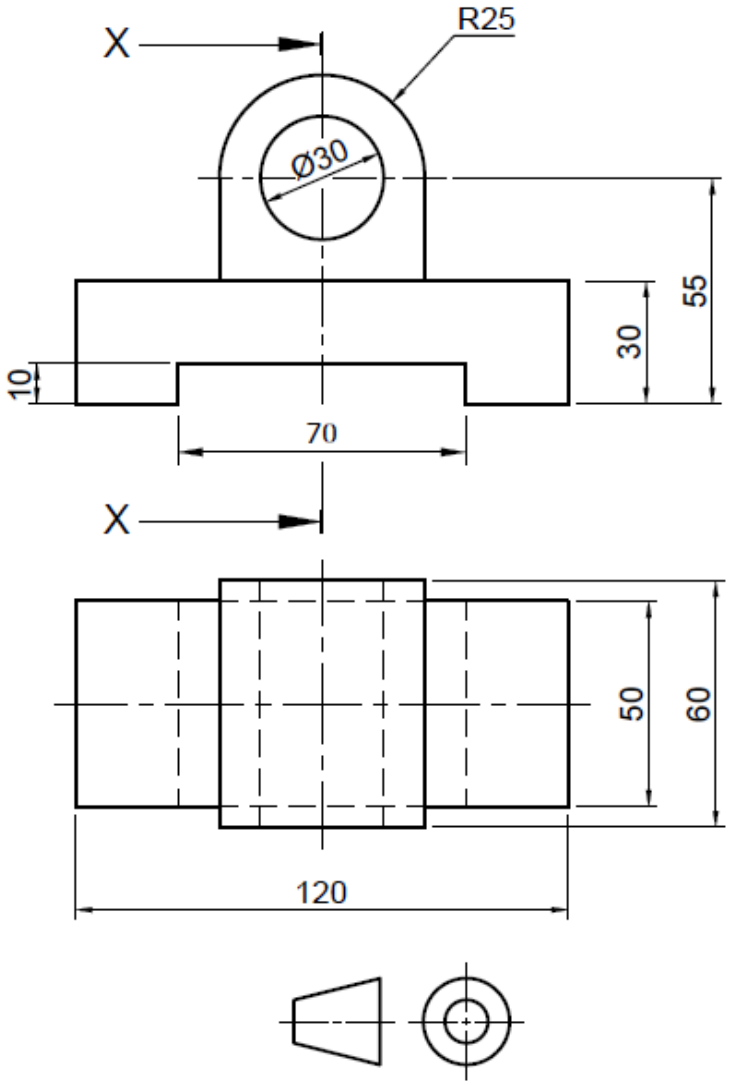

FIGURE 6 **[16]**

QUESTION 7: PRISMS AND PYRAMIDS

FIGURE 7 shows the front view and an auxiliary view of an octagonal prism.

Draw, in first-angle orthographic projection and to scale 1 : 1, the following views of the octagonal prism:

- Front and auxiliary views (4)
- Left view as seen in the direction of arrow L (5)
- Top view as seen in the direction of arrow T (5)

No hidden detail is necessary.

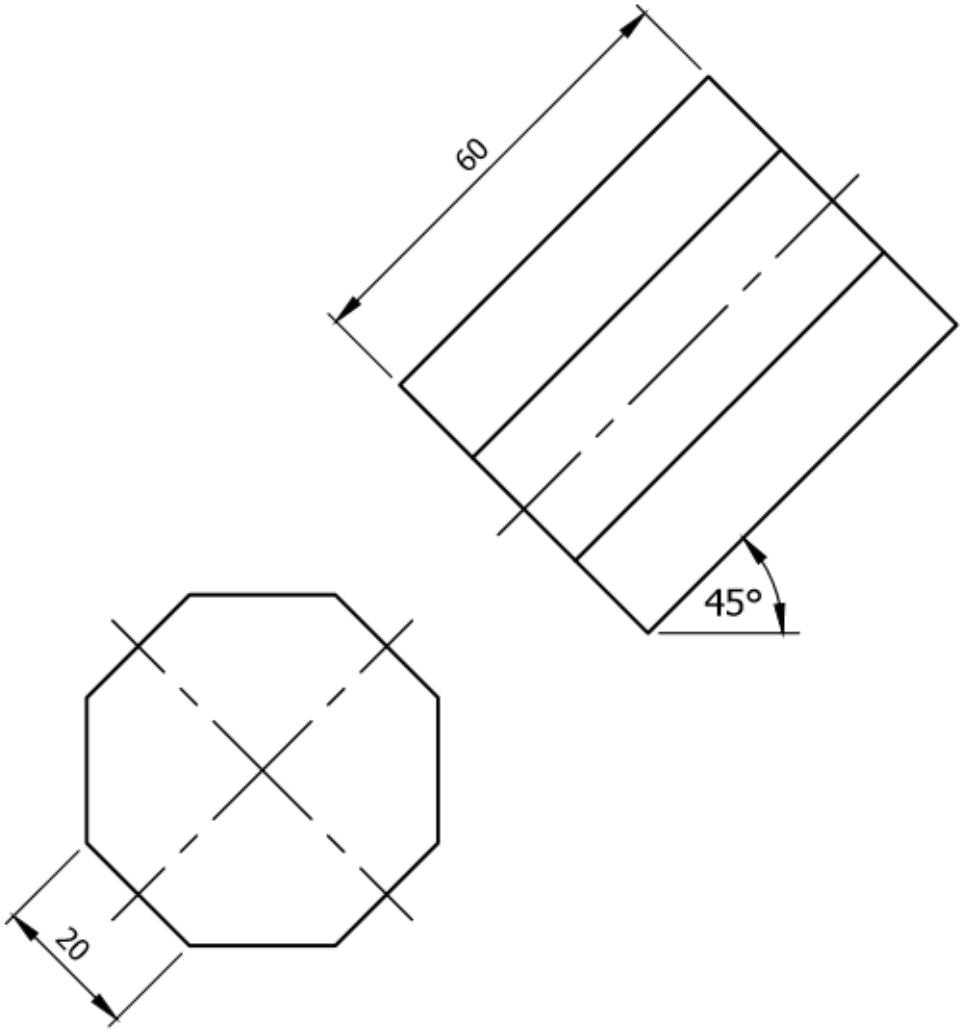

FIGURE 7 **[14]**

Balanced layout and neatness of the completed DRAWING SHEET. **[10]**

TOTAL: 100

Copyright reserved