higher education & training

Department:
Higher Education and Training
REPUBLIC OF SOUTH AFRICA

MARKING GUIDELINE

NATIONAL CERTIFICATE

ENGINEERING DRAWING N1

23 MARCH 2018

This marking guideline consists of 12 pages.

Copyright reserved

INSTRUCTIONS AND INFORMATION

1. Copying and scanning of drawings will affect the accuracy of the drawings on the memorandum.

2. ALL markers are requested to prepare their own marking guideline, so that it can be used during the marking of the candidates' answer sheets.

QUESTION 1

1.2 1.2.1 Pitch circle diameter
1.2.2 Across corners
1.2.3 Assembly
1.2.4 Computer-aided draughting

[(4 × 1) + 1 mark for block] **[5]**

QUESTION 2

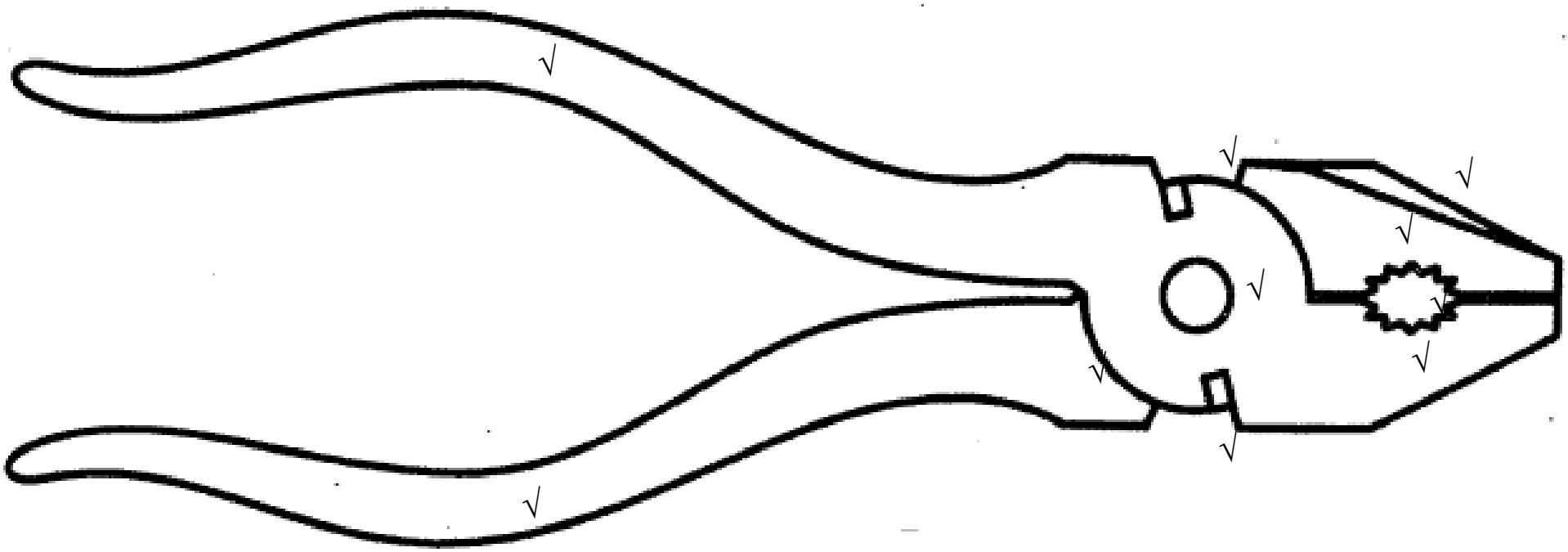

CORRECTNESS	5
LINEWORK	2
ACCURACY	2
TOTAL	**9**

Copyright reserved Copyright reserved

QUESTION 3

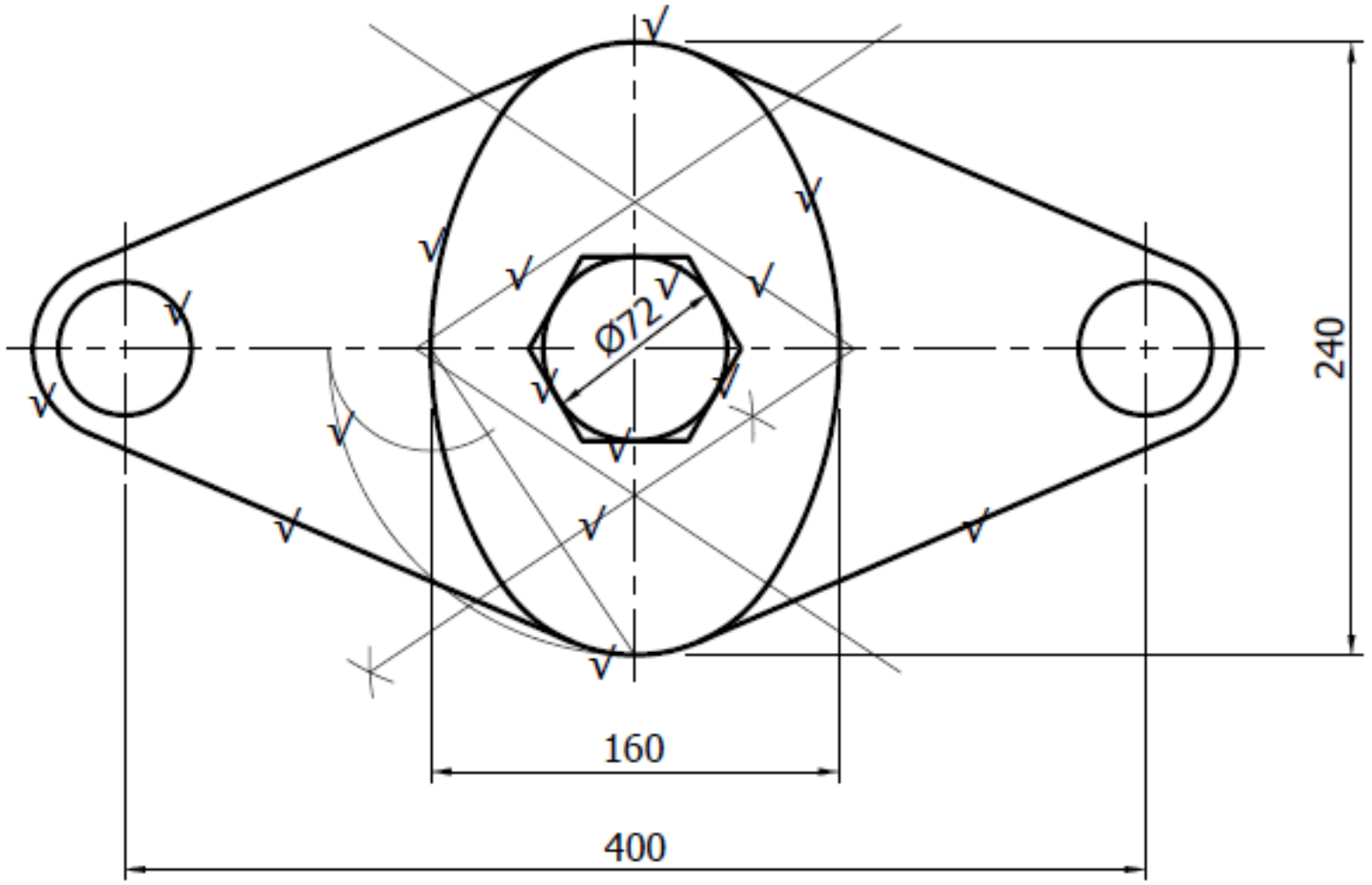

Copyright reserved Copyright reserved

MARK ALLOCATION

CONSTRUCTION OF ELLIPSE		**4**
2 construction arcs	½	
Bisecting line	½	
Construct V	½	
Construct upside down V	½	
½ mark for each of 4 curves forming ellipse	2	
CONSTRUCTION OF HEXAGON		**2**
Inscribed circle	½	
½ mark for each pair of opposite sides	1½	
2 × Ø52 CIRCLES		**½**
2 × R36 RADII		**½**
4 × TANGENTS (½ MARK PER PAIR)		**1**
LINEWORK		**2**
ACCURACY		**2**
ANY 2 DIMENSIONS (TRUE DIMENSIONS)		**1**
TOTAL		**13**

Copyright reserved Copyright reserved

QUESTION 4

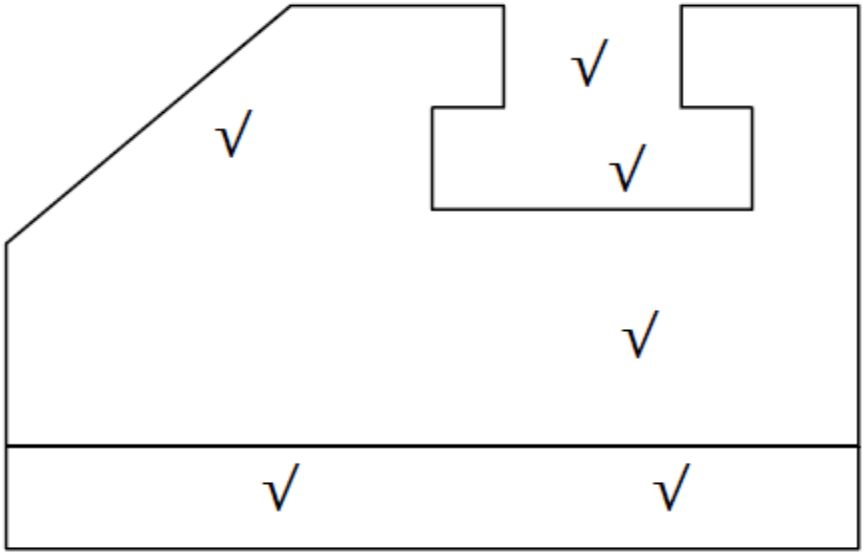

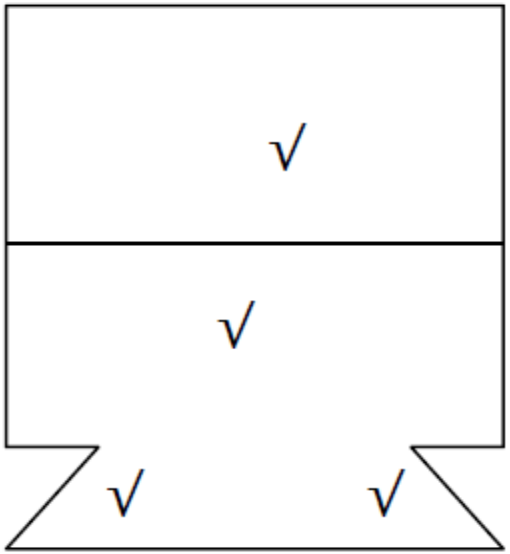

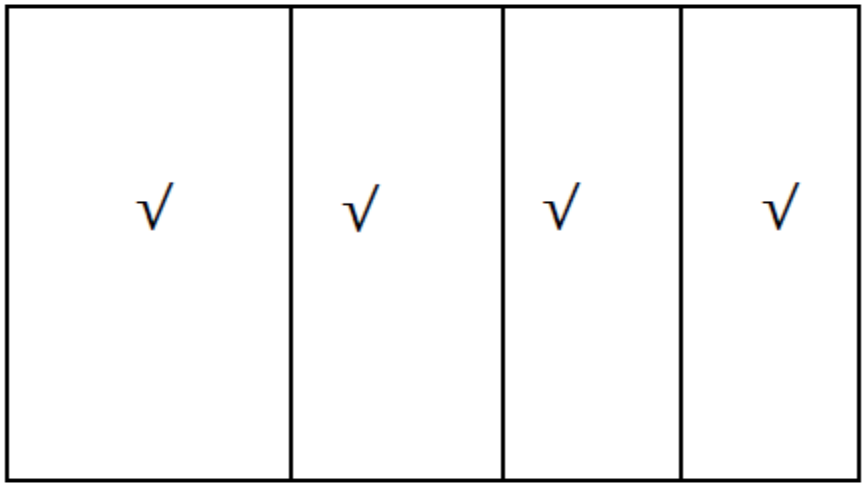

	FRONT	LEFT	TOP
CORRECTNESS	3	2	2
LINEWORK	1	1	1
ACCURACY	1	1	1
PROJECTION SYMBOL	2		
TOTAL	**15**		

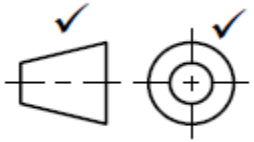

Copyright reserved

Copyright reserved

MARK ALLOCATION FOR CORRECTNESS

FRONT VIEW		**3**
45 mm slot	½	
25 mm gap	½	
Front face	½	
Sloping line	½	
Rectangular area representing dovetail	1	
LEFT VIEW		**2**
Sloping face	½	
Vertical face	½	
Dovetail	1	
TOP VIEW		**2**
Sloping face	½	
Horizontal face in centre of component	½	
Gap	½	
Horizontal face on right edge of component	½	

Copyright reserved Copyright reserved

QUESTION 5

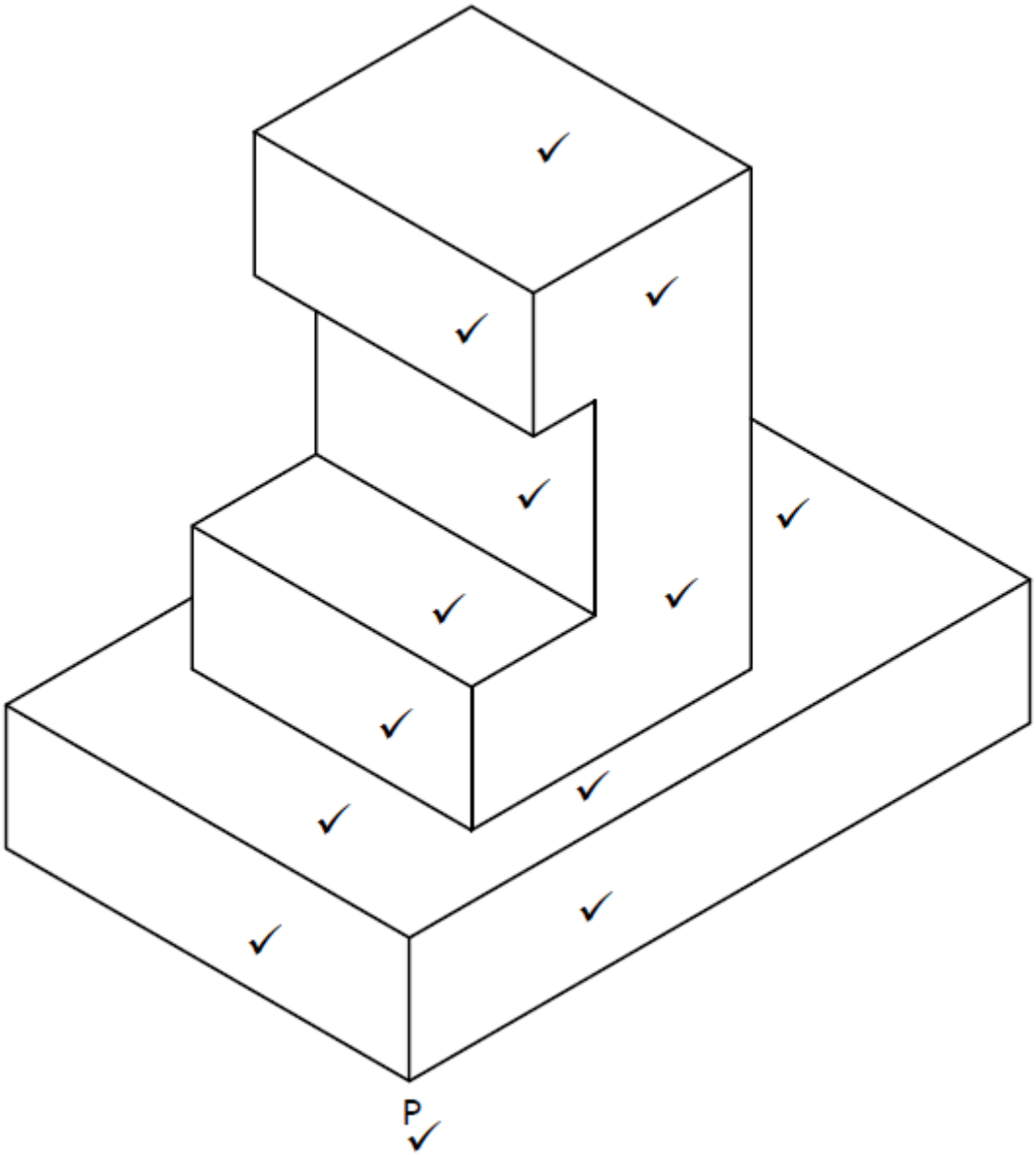

CORRECTNESS	12
LINEWORK	3
ACCURACY	2
LOWEST POINT (P)	1
TOTAL	**18**

QUESTION 6

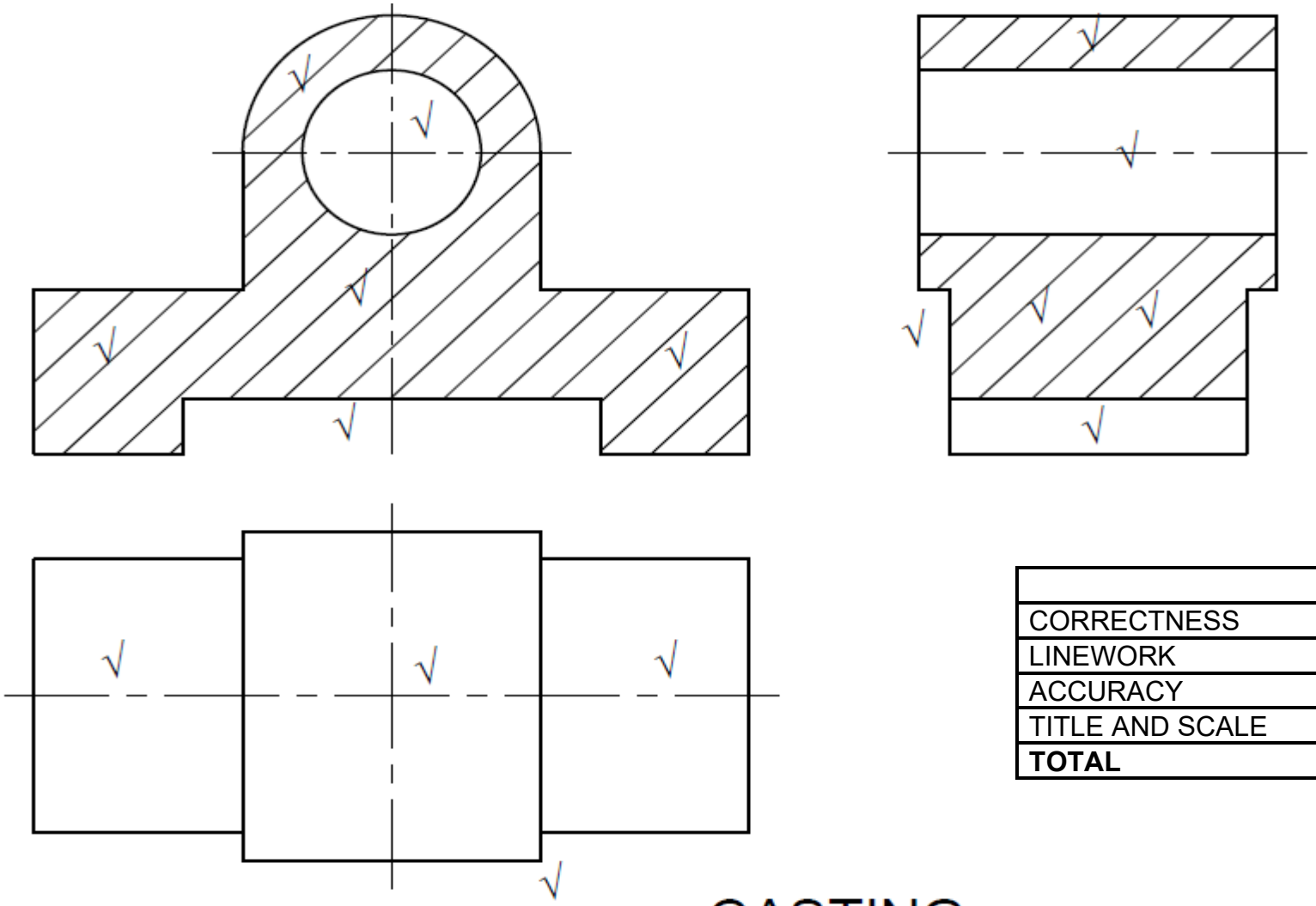

	FRONT	LEFT	TOP
CORRECTNESS	3	3	2
LINEWORK	1	1	1
ACCURACY	1	1	1
TITLE AND SCALE	2		
TOTAL	**16**		

Copyright reserved Copyright reserved

MARK ALLOCATION FOR CORRECTNESS

FRONT VIEW		**3**
Correctly sectioned	2	
Ø30 hole not sectioned	½	
Slot at bottom of casting	½	
LEFT VIEW		**3**
Top portion correctly sectioned	**½**	
Ø30 hole not sectioned	½	
Middle portion correctly sectioned	1	
Slot not sectioned	½	
Base narrower than top portion	½	
TOP VIEW		**2**
½ mark for each area shown	**1½**	
Base narrower than top portion	½	

Copyright reserved Copyright reserved

QUESTION 7

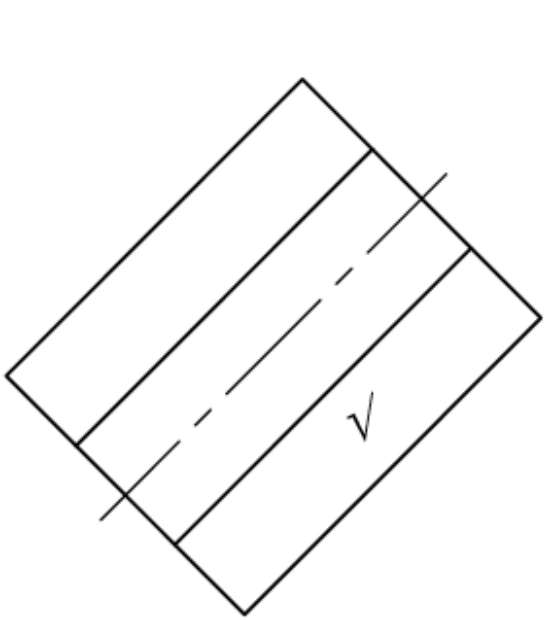

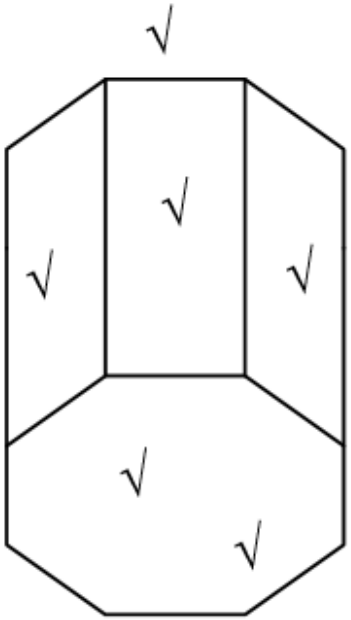

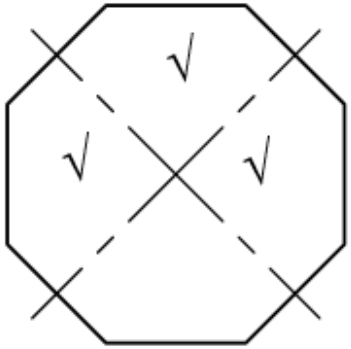

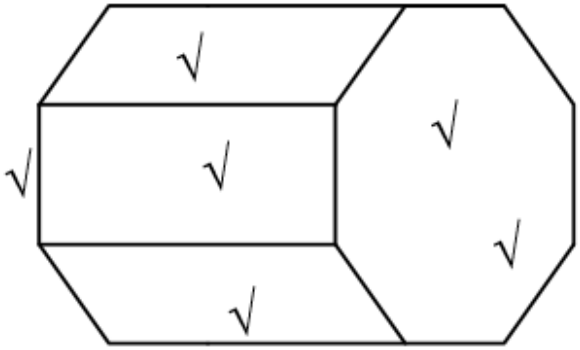

	FRONT	LEFT	TOP
CORRECTNESS	2	3	3
LINEWORK	1	1	1
ACCURACY	1	1	1
TOTAL	**14**		

Copyright reserved
Copyright reserved

MARK ALLOCATION FOR CORRECTNESS

GIVEN VIEWS		**2**
Front view	½	
Auxilliary view (octagon)	1½	
LEFT VIEW		**3**
Bottom face	1	
3 side faces shown	1½	
Top edge	½	
TOP VIEW		**3**
Top face	1	
3 side faces shown	1½	
Bottom edge	½	

BALANCED LAYOUT AND NEATNESS OF THE COMPLETED DRAWING SHEET	
All questions answered	1
Both sides of drawing used	1
Questions correctly numbered	1
Only pencil used (including candidate information)	1
15 mm border on both sides of drawing sheet	2
Good planning/well spaced out answers	2
General neatness of drawing sheet	2
TOTAL	**[10]**

TOTAL: 100

Copyright reserved