higher education & training

Department:
Higher Education and Training
REPUBLIC OF SOUTH AFRICA

T600**(E)**(J31)T

NATIONAL CERTIFICATE

ENGINEERING PHYSICS N5

(15070115)

31 July 2018 (X-Paper)
09:00–12:00

This question paper consists of 6 pages and a formula sheet of 3 pages.

Copyright reserved

DEPARTMENT OF HIGHER EDUCATION AND TRAINING
REPUBLIC OF SOUTH AFRICA

NATIONAL CERTIFICATE
ENGINEERING PHYSICS N5
TIME: 3 HOURS
MARKS: 100

INSTRUCTIONS AND INFORMATION

1. Answer ALL the questions.
2. Read ALL the questions carefully.
3. Number the answers according to the numbering system used in this question paper.
4. Keep subsections of questions together.
5. Start each answer with the formula and the substituted values.
6. Each final answer must be rounded off to THREE decimal numbers.
7. The formula sheet is NOT necessarily complete. Read through it quickly before you start answering the questions.
8. Write neatly and legibly.

Copyright reserved

QUESTION 1

1.1 Indicate whether the following statements are TRUE or FALSE. Choose the answer and write only 'True' or 'False' next to the question number (1.1.1–1.1.10) in the ANSWER BOOK.

1.1.1 Light does not need a medium of propagation.

1.1.2 Capillary rise in hair tubes can be reduced by increasing the surface tension of the liquid on it.

1.1.3 A sugar solution will diffuse more rapidly than the same concentration of starch at the same temperature.

1.1.4 The higher the pulling force on a string, the higher is the frequency of the sound.

1.1.5 Diffraction of light can be seen with the naked eye at the end of a razor blade.

1.1.6 The diameter of a solenoid does not affect the magnetic flux density inside the solenoid.

1.1.7 The winding ratio in a transformer is the same as the current ratio.

1.1.8 It is possible to obtain an angle of contact of 0° between a liquid and a solid.

1.1.9 A galvanometer contains a permanent magnet.

1.1.10 Short-sightedness of the eye lens can be remedied with the aid of a convex lens.

(10 × 1) (10)

1.2 The gas constant R of 4 kg gas is 360 J/kg K.

Calculate the volume this gas will occupy at a pressure of 900 mm mercury and at the boiling point of water. The density of the mercury is 13 600 kg/m^3. (4)

1.3 A vessel with a volume of 0,4 m^3 contains 2,1 bar nitrogen at 18 °C. If 0,4 kg of nitrogen is now pumped into the vessel, the molecular weight of the nitrogen is 28 and it may be assumed to be a perfect gas.

Calculate the following:

1.3.1 The gas constant R (2)

1.3.2 The initial mass of the gas (3)

1.3.3 The new pressure when the vessel has returned to its initial temperature (3)

1.4 Determine the distance between two masses in cm if 50 kg and 30 g are attracted to each other by a force of 250 kN. (3)

[25]

QUESTION 2

2.1 A cylinder contains 400 ml gas at a pressure of 150 kPa at 30 °C. The gas is compressed adiabatically to a pressure of 500 kPa.

If C_p = 0,25 kJ/kg K and C_v = 92 J/kg K, calculate the following:

2.1.1 The mass of the gas in the cylinder

2.1.2 The final volume

2.1.3 The final temperature

2.1.4 The average velocity of the gas molecules at the original condition

(4 × 3) (12)

2.2 Study the diagram used to demonstrate the experiment of Charles' law in FIGURE 1 below and label the parts indicated as A–F. Write only the answer next to the letter (A–F) in the ANSWER BOOK.

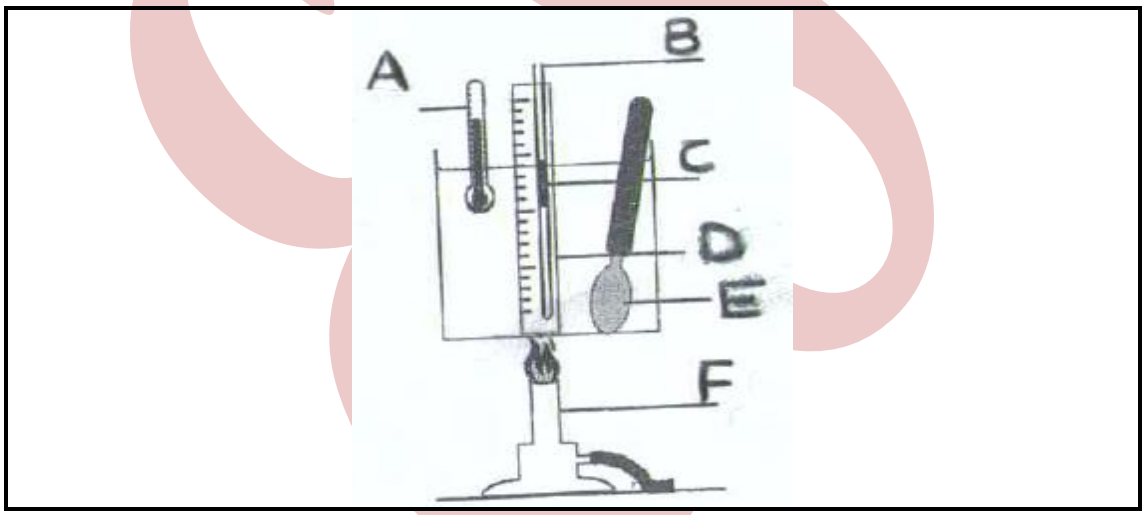

(6)

FIGURE 1

2.3 An object is placed at a distance of 220 mm from a concave mirror with a focal length of 100 mm.

Determine the position, nature and size of the image formed if the height of the object is 50 mm. (7)

[25]

QUESTION 3

3.1 Study the diagram of the human eye in FIGURE 2 below and provide suitable names for the parts indicated as A–G. Write only the answer next to the letter (A–G) in the ANSWER BOOK.

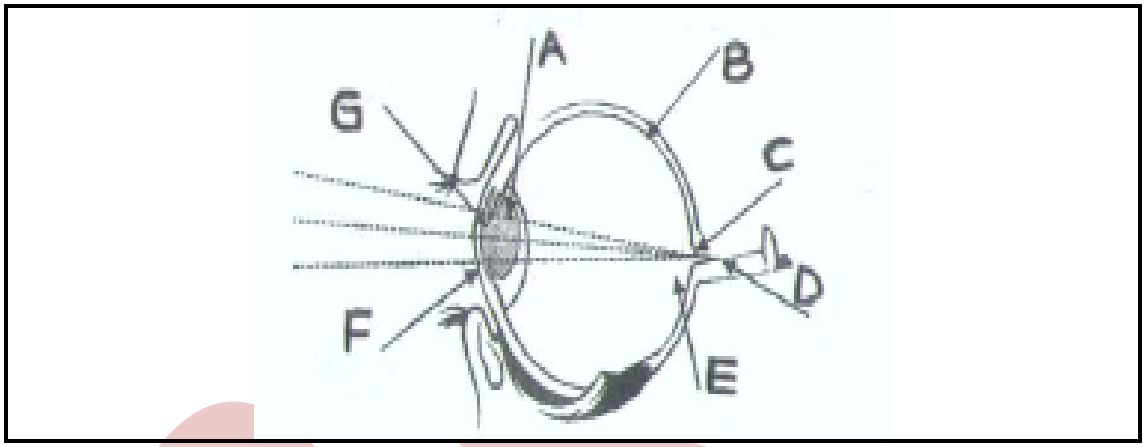

(7)

FIGURE 2

3.2 Draw and label a detailed structure of a galvanometer. (10)

3.3 Determine the surface tension of a liquid that requires a force of 0,098 N to hold a wire frame 160 mm wide in equilibrium. (2)

3.4 Define the following:

3.4.1 Surface tension

3.4.2 Diffusion

3.4.3 Osmosis

(3 × 2) (6)

[25]

QUESTION 4

4.1 Provide another name or an explanation for each of the following converging lenses:

4.1.1 Convex-concave lens

4.1.2 Plano-convex lens

(2 × 1) (2)

4.2 The focal length of a convex mirror is 200 mm, and the object is 100 mm away from the mirror.

Determine the image distance by means of the mirror formula. (4)

Copyright reserved

4.3 The index of refraction of a glass prism is 1,5 and the angle at the apex of the prism is 30°.

Calculate the angle of minimum deviation of the prism. (4)

4.4 Find the die critical angle of glycerine. (2)

4.5 Calculate the power of a lens with a focal length of 200 mm. (1)

4.6 Calculate the illumination intensity E of a light of 72 cd at a point 600 mm away. (2)

4.7 Name ONE use of each of the following:

4.7.1 Diffraction grating

4.7.2 Polarimeter

4.7.3 Magnetometer

4.7.4 Wattmeter

4.7.5 Leslie's cube

(5 × 1) (5)

4.8 Calculate the magnet flux density at a point P that is 80 mm from a straight-line wire through which a current of 18 A is flowing. (3)

4.9 If a concave mirror has a focal length of 300 mm and a light from infinity falls on it, what is the radius of the curvature? (2)

[25]

TOTAL: 100

Copyright reserved

ENGINEERING PHYSICS N5

FORMULA SHEET

Any applicable formula may be used.

$$B = \frac{\mu_0 I}{2\pi r}$$

$$B = \frac{\mu_0 I}{2r}$$

$$B = \frac{\mu_0 NI}{2r}$$

$$B = \frac{\mu_0 NI}{2L}$$

$$B = \frac{\phi}{A}$$

$$\phi = B\ A \sin\theta$$

$$E = \frac{I\cos\theta}{r^2}$$

$$E = \frac{\sigma}{\varepsilon} = \frac{F/A}{\Delta L/L}$$

$$E = e\sigma T^4 At$$

$$\text{EMK/EMF} = \frac{N\Delta\phi}{\Delta t}$$

$$\text{EMK/EMF} = BLv$$

$$F = \frac{Gm_1m_2}{r^2}$$

$$F = BIL\sin\theta$$

$$f = nz$$

$$f = f_1 - f_2$$

$$\frac{1}{f} = \frac{1}{a} + \frac{1}{b}$$

$$\frac{1}{f} = (n-1)\left(\frac{1}{R_1} + \frac{1}{R_2}\right)$$

$$h = \frac{2\,T\cos\alpha}{r\rho g}$$

$$n = \frac{\sin i}{\sin r}$$

$$n = \frac{\sin(A + Dm)/2}{\sin A/2}$$

$$\sin\theta_c = \frac{1}{n}$$

$$\frac{N_p}{N_s} = \frac{V_p}{V_s} = \frac{I_s}{I_p}$$

$$p = \rho gh$$

$$\rho = \frac{m}{V}$$

$$pV = mRT\ (m = nM)$$

$$pV = nR_0T$$

$$\frac{p_1V_1}{T_1} = \frac{p_2V_2}{T_2}$$

$$p_1V_1^{\gamma} = p_2V_2^{\gamma}$$

$$Q = u + w$$

$$Q = mc\Delta t$$

$$Q = \frac{ka\Delta T\Delta t}{L}$$

$$R_s = \frac{V_0}{I_g} - R_g$$

$$R_s = \frac{R_gI_g}{I_t - I_g}$$

$$R = c_p - c_v$$

$$\gamma = \frac{c_p}{c_v}$$

$$\frac{r_1}{r_2} = \sqrt{\frac{\rho_2}{\rho_1}} = \sqrt{\frac{M_2}{M_1}} = \frac{t_2}{t_1}$$

Copyright reserved

$$T = \frac{F}{2\ell} = \frac{F}{4\pi r}$$

$$V = \frac{b}{a}$$

$$V = \frac{0{,}25 \times d}{f_1 \times f_2}$$

$$V = 4/3\,\pi\, r^3$$

$$v = \sqrt{\frac{3p}{\rho}} = \sqrt{\frac{3R_0T}{M}} \quad \left(n = \frac{m}{M}\right)$$

$$v = \sqrt{\frac{T}{\mu}} = \sqrt{\frac{E}{\rho}} = \sqrt{\frac{\gamma P}{\rho_0}}$$

$$v = f\lambda$$

$$\lambda = d\sin\theta$$

$$\mu = \frac{m}{L}$$

$$\frac{v}{v_0} = \sqrt{\frac{T}{T_0}}$$

$$W = VI$$

$$W = p\Delta V$$

Copyright reserved

CONSTANT VALUES

Speed of light	$c = 2,99 \times 10^{8}$ m/s
Speed of sound at 0°C	$v = 330$ m/s
Gravitational constant	$G = 6,673 \times 10^{-11}$ N.m^2/kg^2
Stefan-Boltzmann's constant	$\Phi = 5,67 \times 10^{-8}$ W/m^2.K.^{4}
Universal gas constant	$R_0 = 8,314$ J/mol.K
Permeability in a vacuum	$\mu_0 = 4\ \pi \times 10^{-7}$ Wb/A.m
Specific heat capacity of water	$c = 4\ 187$ J/kg.K
Standard atmospheric pressure	$= 1,013 \times 10^{5}$ Pa
Gravitational acceleration	$g = 9,8$ m/s^2
Refractive index of:	
Water	$n = 1,33$
Glycerine	$n = 1,47$
Glass	$n = 1,5$
Surface tension water	$T = 0,0756$ N/m (0 °C)
	$T = 0,0728$ N/m (20 °C)
Mass: Sun	$m = 1,99 \times 10^{30}$ kg
Earth	$m = 5,98 \times 10^{24}$ kg
Moon	$m = 7,36 \times 10^{22}$ kg
Radius: Sun	$r = 6,95 \times 10^{8}$ m
Earth	$r = 6,38 \times 10^{6}$ m
Moon	$r = 1,74 \times 10^{6}$ m
Other: 1 bar = 10^5 Pa	
1 ton = 10^3 kg	

Copyright reserved