higher education & training

Department:
Higher Education and Training
REPUBLIC OF SOUTH AFRICA

NATIONAL CERTIFICATE

ENGINEERING PHYSICS N5

(15070115)

12 April 2021 (X-paper)
09:00–12:00

This question paper consists of 6 pages and a formula sheet of 3 pages.

128Q1A2112

Copyright reserved

DEPARTMENT OF HIGHER EDUCATION AND TRAINING
REPUBLIC OF SOUTH AFRICA

NATIONAL CERTIFICATE
ENGINEERING PHYSICS N5
TIME: 3 HOURS
MARKS: 100

INSTRUCTIONS AND INFORMATION

1. Answer all the questions.
2. Read all the questions carefully.
3. Number the answers according to the numbering system used in this question paper.
4. Start each question on a new page.
5. Use only black or blue pen.
6. Write neatly and legibly.

Copyright reserved

QUESTION 1

1.1 Indicate whether the following statements are TRUE or FALSE by writing only 'True' or 'False' next to the question number (1.1.1–1.1.5) in the ANSWER BOOK.

1.1.1 The universal gas law is represented as PV = mRT

1.1.2 Latent heat is the amount of heat required to raise the temperature of a substance by one degree per unit mass.

1.1.3 One part of green light and one part of red light will produce yellow light.

1.1.4 Radiation is the way in which heat from the sun reaches the earth.

1.1.5 An isobaric process is any process during which the temperature remains constant.

(5 × 1) (5)

1.2 Define the following:

1.2.1 Candela (3)

1.2.2 Newton's law of gravitation (3)

1.2.3 Short-sighted person (2)

1.2.4 Surface tension (3)

1.2.5 Adhesive force (2)

1.3 Provide ONE suitable example of each of the following:

1.3.1 Sound that resonance in a closed tube

1.3.2 Total reflection of light that cause light to turn through 180^0

1.3.3 Object that seldom produces pure tone and overtones

(3 × 1) (3)

1.4 Name ONE use of each of the following:

1.4.1 Wattmeter

1.4.2 Oscilloscope

(2 × 2) (4)

[25]

Copyright reserved

QUESTION 2

2.1 Differentiate between *transverse wave* and *longitudinal wave.* (2)

2.2 Briefly explain what will happen during the formation of an image through lenses if the object is closer than the focal point (F). (4)

2.3 During an experiment to investigate Boyle's law, the following results were obtained:

Volume in m^3	0.35	0.8	B
Pressure in KPa	20	A	2

2.3.1 Write down the possible values of A and B. (2)

2.3.2 Give Boyle's law in words. (3)

2.3.3 Draw a graph to describe Boyle's law. (3)

2.4 Study the diagram below and answer the questions.

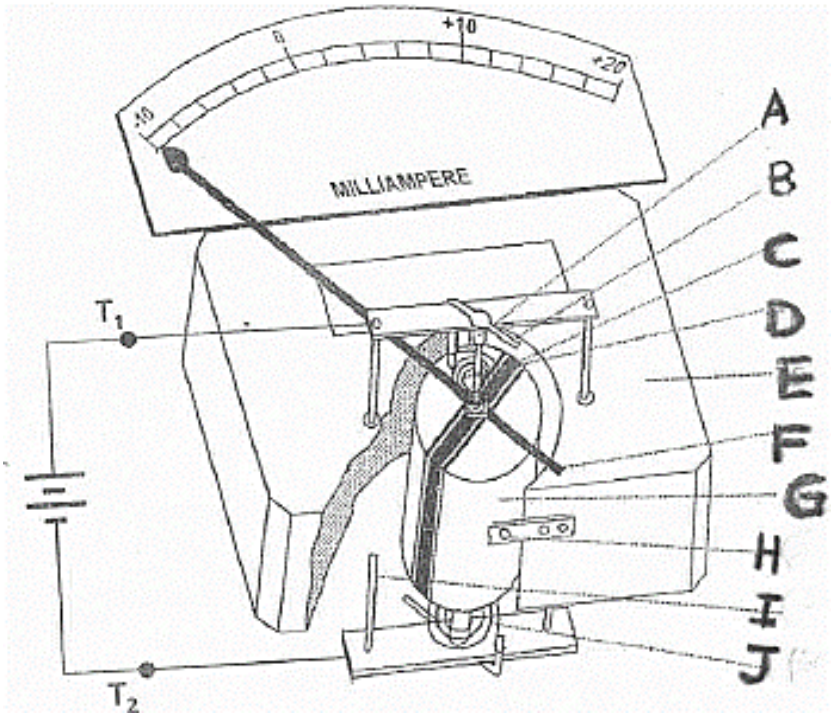

2.4.1 Give a suitable name for the diagram. (1)

2.4.2 Name the labelled parts by writing only the answer next to the letter (A–J) in the ANSWER BOOK. (10)

[25]

QUESTION 3

3.1 4 m^3 of a gas at a pressure of 3.3 KPa and 27 $^{\circ}$C is compressed adiabatically in accordance with the formula $P.V^{1.25}$ = Constant until the pressure is 6 KPa.

Calculate the following:

3.1.1 New volume of the gas (3)

3.1.2 Mass of the gas if the gas constant R = 0,187 KJ/Kg. K (2)

3.1.3 Density of the gas (2)

3.2 Name FOUR factors that will make a galvanometer more sensitive. (4)

3.3 Calculate the frequency of the fundamental tone as well as the first overtones of an open tube at 30 $^{\circ}$C if the tube is 750 mm long. (7)

HINT: In the tube, the antinode is always at the open end of the tube; for overtones, one loop is added to the others.

3.4 An object is placed at a distance of 400 mm from a concave mirror with a focal length of 200 m.

Determine the following:

3.4.1 Position of the image (2)

3.4.2 Nature of the image (2)

3.4.3 The size of the image formed if the height of the object is 50 mm (3)

[25]

QUESTION 4

4.1 Find the secondary voltage on a 240 V transformer which draws a current of 2 A from the source and produce 12 A in the secondary coil. (3)

4.2 A liquid exerts osmotic pressure of 1.85 KPa and rises 160 mm in a funnel.

Calculate the density of the liquid. (3)

4.3 Name THREE factors which influence an induced emf coil. Assume that the emf is caused by pushing a bar magnet into the coil. (3)

4.4 It takes 0.6 seconds to move a coil consisting of 200 windings from a position where the magnetic flux is 14×10^{-5} Wb to where it is 5×10^{-6} Wb.

Calculate the emf induced in ONE movement. (3)

Copyright reserved

4.5 List FOUR factors that influence the rate of diffusion. (4)

4.6 A solar heater is built on top of the roof to heat 180 L of water in the geyser. The solar is in the form of rectangular silver box of 2,5 m × 1,2 m × 1,8 cm and is put behind glass where the temperature reaches 65 °C. The water circulates by convection and the initial temperature of water is 10 °C and its final temperature will be 55 °C.

Calculate the following:

4.6.1 The volume of the water to be heated (3)

4.6.2 Energy required to raise the temperature of the water (3)

4.6.3 Time taken required by the panel to heat up the water (3)

[25]

TOTAL: 100

Copyright reserved

FORMULA SHEET

Any other applicable formula may also be used.

$$B = \frac{\mu_0 I}{2r}$$

$$B = \frac{\mu_0 NI}{L}$$

$$B = \frac{\mu_0 I}{2\pi r}$$

$$B = \frac{\mu_0 NI}{2r}$$

$$B = \frac{\phi}{A}$$

$$\phi = B\ A \sin\theta$$

$$E = \frac{I\cos\theta}{r^2}$$

$$E = \frac{\sigma}{\varepsilon} = \frac{F/A}{\Delta L/L}$$

$$E = e\sigma T^4 At$$

$$\text{emf} = \frac{N\Delta\phi}{\Delta t}$$

$$\text{emf} = \text{BLv}$$

$$F = \frac{Gm_1 m_2}{r^2}$$

$$F = BIL\sin\theta$$

$$\text{f} = \text{nz}$$

$$f = f_1 - f_2$$

$$\frac{1}{f} = \frac{1}{a} + \frac{1}{b}$$

$$\frac{1}{f} = (n-1)\left(\frac{1}{R_1} + \frac{1}{R_2}\right)$$

$$h = \frac{2\,T\cos\alpha}{r\rho g}$$

$$n = \frac{\sin i}{\sin r}$$

$$n = \frac{\sin(A + Dm)/2}{\sin A/2}$$

$$\sin\theta_c = \frac{1}{\text{n}}$$

$$\frac{N_p}{N_s} = \frac{V_p}{V_s} = \frac{I_s}{I_p}$$

$$p = \rho g h$$

$$\rho = \frac{m}{V}$$

$$\text{pV} = \text{mRT (m} = \text{nM)}$$

$$pV = nR_0 T$$

$$\frac{p_1 V_1}{T_1} = \frac{p_2 V_2}{T_2}$$

$$p_1 V_1^{\gamma} = p_2 V_2^{\gamma}$$

$$\text{Q} = \text{u} + \text{w}$$

$$Q = mc\Delta t$$

$$Q = \frac{ka\Delta T\Delta t}{L}$$

$$R_s = \frac{V_0}{I_g} - R_g$$

$$R_s = \frac{R_g I_g}{I_t - I_g}$$

$$R = c_p - c_v$$

$$\gamma = \frac{c_p}{c_v}$$

Copyright reserved

$$\frac{r_1}{r_2} = \sqrt{\frac{\rho_2}{\rho_1}} = \sqrt{\frac{M_2}{M_1}} = \frac{t_2}{t_1}$$

$$T = \frac{F}{2\ell} = \frac{F}{4\pi r}$$

$$V = \frac{b}{a}$$

$$V = \frac{0{,}25 \times d}{f_1 \times f_2}$$

$$V = 4/3\,\pi\, r^3$$

$$v = \sqrt{\frac{3p}{\rho}} = \sqrt{\frac{3R_0T}{M}} \quad \left(n = \frac{m}{M}\right)$$

$$v = \sqrt{\frac{T}{\mu}} = \sqrt{\frac{E}{\rho}} = \sqrt{\frac{\gamma P}{\rho_0}}$$

$$\mu = \frac{m}{L}$$

v = f8

8 = d sin 2

$$\frac{v}{v_0} = \sqrt{\frac{T}{T_0}}$$

W = VI

W = p)V

Copyright reserved

CONSTANT VALUES

Speed of light	$c = 2{,}99 \times 10^{8}$ m/s
Speed of sound at 0 °C	v = 330 m/s
Gravitational constant	$G = 6{,}673 \times 10^{-11}$ N.m^2/kg^2
Stefan-Boltzmann's constant	$\Phi = 5{,}67 \times 10^{-8}$ W/m^2.K^4
Universal gas constant	R_0 = 8,314 J/mol.K
Permeability in a vacuum	$\mu_0 = 4\ \pi \times 10^{-7}$ Wb/A.m
Specific heat capacity of water	c = 4 187 J/kg.K
Standard atmospheric pressure	$p = 1{,}013 \times 10^{5}$ Pa
Gravitational acceleration	g = 9,8 m/s^2
Refractive index:	
Water	n = 1,33
Glycerine	n = 1,47
Glass	n = 1,5
Surface tension water	T = 0,0756 N/m (0 °C)
	T = 0,0728 N/m (20 °C)
Mass:	
Sun	m = 1,99 × 1030 kg
Earth	m = 5,98 × 1024 kg
Moon	m = 7,36 × 1022 kg
Radius:	
Sun	r = 6,95 × 108 m
Earth	r = 6,38 × 106 m
Moon	r = 1,74 × 106 m
Other:	
1 bar = 105 Pa	
1 ton = 103 kg	

Copyright reserved