higher education & training

Department:
Higher Education and Training
REPUBLIC OF SOUTH AFRICA

MARKING GUIDELINE

NATIONAL CERTIFICATE

ELECTROTECHNOLOGY N3

29 NOVEMBER 2019

This marking guideline consists of 8 pages.

Copyright reserved

QUESTION 1

1.1 1.1.1 Lap windings are used in machines that operate at a high current and low voltage.

1.1.2 Wave windings are used in machines that operate at a high voltage and low current.

(2 × 2) (4)

1.2

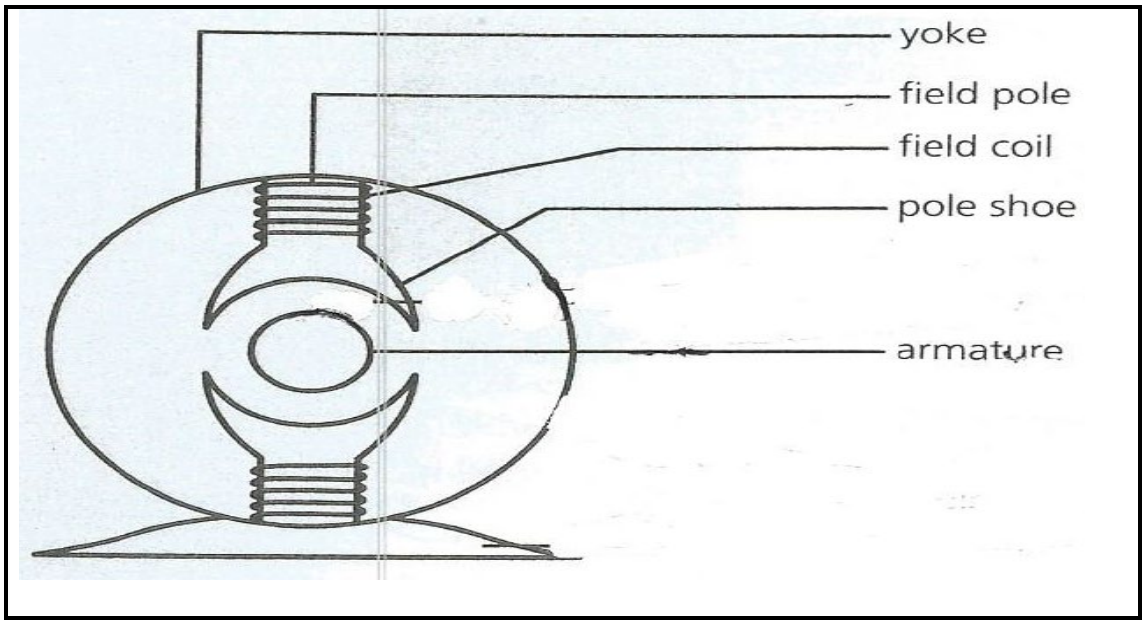

(1 mark for each correct labeling and 1 mark for the correct sketch) (6)

[10]

QUESTION 2

2.1
- Magnetic flux density
- Number of armature conductors
- Number of pole pairs
- Rate at which the magnetic lines of flux are cut
- Speed of the shaft
- Length of the wire making up the coil
- Strength of the magnetic field (Any 3 × 1) (3)

Copyright reserved

2.2

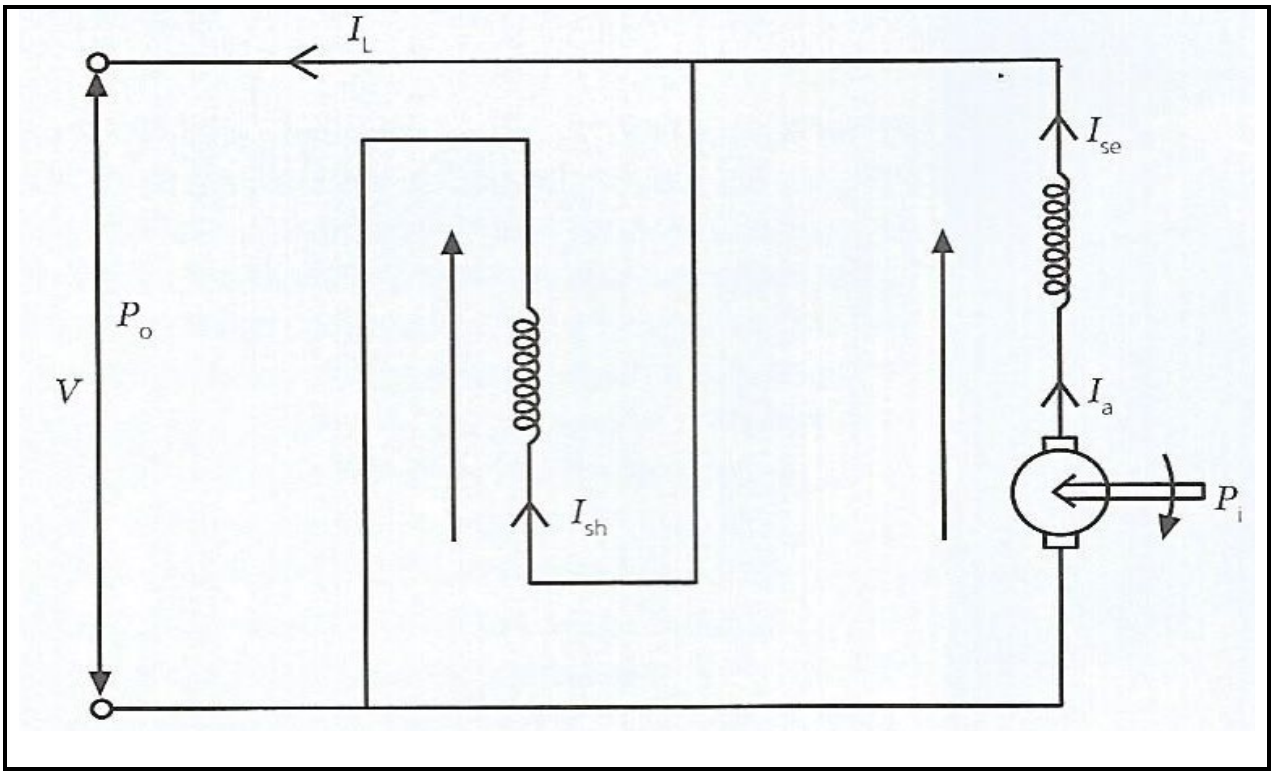

(1 mark each for I_a, I_{sh}, I_{se}) (3 × 1) (3)
(1 mark for P_o) (1)
(1 mark for P_i) (1)

2.3
- Used as battery chargers
- Used for the excitation of AC machines

(2)
[10]

QUESTION 3

3.1 3.1.1 Decrease the shunt field current by inserting a resistor in series with the shunt field.

3.1.2 Decrease the voltage across the armature by inserting a resistor in series with the armature.

(2 × 2) (4)

3.2 Back EMF (2)

3.3 $E = V - I_a R_a - I_a R_{se} = 250 - (45)(0{,}1 + 0{,}25) = 234{,}25\ V$

$k = \frac{E}{N\emptyset} = \frac{234{,}25}{(1\,000)(25\times10^{-3})} = 9{,}37$

(2 × 2) (4)
[10]

QUESTION 4

4.1

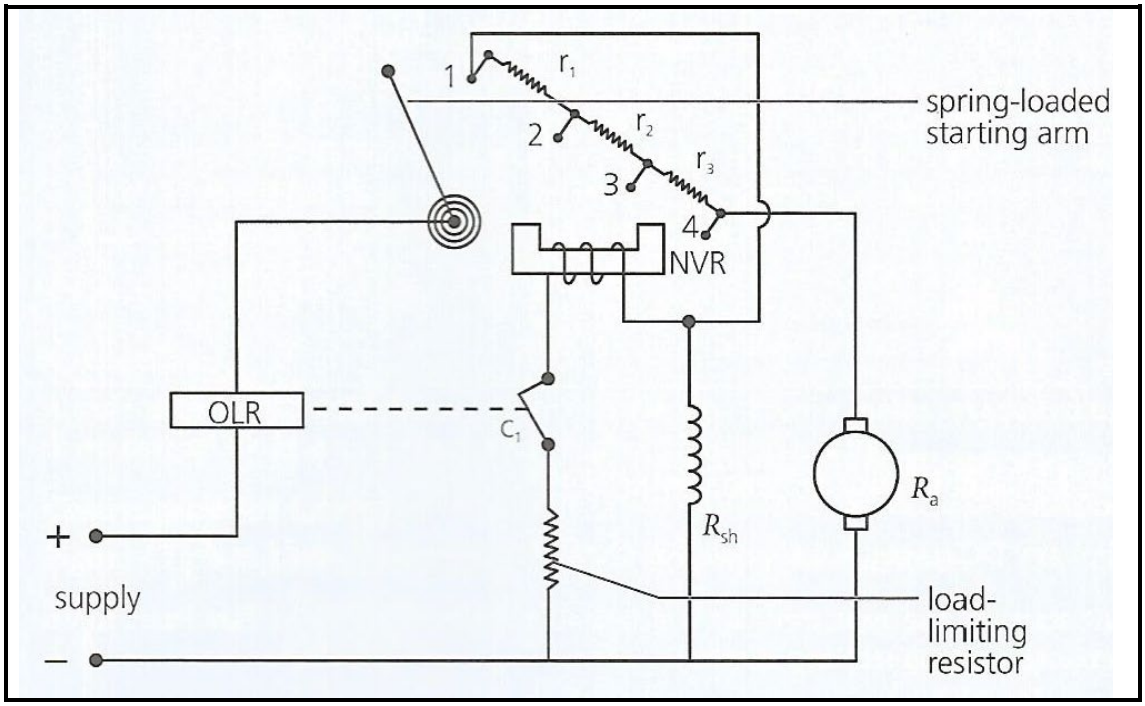

(1 mark for each component) (7 × 1) (7)

4.2 $P_o = VI_L \quad \therefore I_L = I_1 = \frac{18\,000}{200} = 90\,A$✓

$\eta = \sqrt{\frac{I_1}{I_1+I_2}} \times 100\% = \sqrt{\frac{90}{90+12}} \times 100\% = 93{,}934\%$✓✓

(3)
[10]

QUESTION 5

5.1
- Use capacitor banks
- Use an over-excited synchronous motor

(2)

5.2 5.2.1 $250 = 420\sin(628{,}319t \times 57{,}3)$

$\sin(628{,}319t \times 57{,}3) = 0{,}595$

$(628{,}319t \times 57{,}3) = 36{,}513^{\circ}$ ✓

t = 1,014 ms✓

5.2.2 $\sin(628{,}319t \times 57{,}3) = 1$

$(628{,}319t \times 57{,}3) = 90^{\circ}$✓

t = 2,5 ms ✓

5.2.3 $e = 420 \sin[(628,319)(2 \times 10^{-3})(57,3)]$

= 420 sin (72,005˚) ✓

= 399,455 V✓

(3 × 2) (6)

5.3 Frequency is the number of completed cycles in one second.
OR
It is the total number of complete changes in a given time (usually one second). (2)
[10]

QUESTION 6

6.1 6.1.1 $X_L = 2\pi fL = (2)(\pi)(50)(60 \times 10^{-3}) = 18,85\ \Omega$

$X_c = \frac{1}{2\pi fC} = \frac{1}{(2)(\pi)(50)(200 \times 10^{-6})} = 15,915\ \Omega$

$Z_T = \sqrt{R^2 + (X_L - X_C)^2} = \sqrt{35^2 + (18,85 - 15,915)^2} = 35,123\ \Omega$ (3)

6.1.2 $I_T = \frac{V_T}{Z_T} = \frac{125}{35,123} = 3,559\ A$ (1)

6.1.3 $V_R = I_T R = (3,559)(35) = 124,565\ V$

$V_L = I_T X_L = (3,559)(18,85) = 67,087\ V$

$V_C = I_T X_C = (3,559)(15,915) = 56,641\ V$ (3)

6.2 6.2.1 V_T = 124,565 + 67,087 + 56,641 = 248,293 V (1)

6.2.2 $V_T = \sqrt{124,565^2 + (67,087 - 56,641)^2} = 125\ V$

(2)
[10]

QUESTION 7

7.1 Power factor is the ratio of true power to apparent power. (2)

7.2 7.2.1 $V_p = \frac{V_L}{\sqrt{3}} = \frac{380}{\sqrt{3}}\ 219,393$ (1)

7.2.2 $I_L = \frac{22 \times 10^3}{\sqrt{3}(380)(0,8)} = 41,782\ A$ (2)

7.2.3 $I_p = I_L = 41,782\ A$ (1)

7.2.4 $\cos \emptyset = 0,8 \quad \therefore \emptyset = 36,87°$ (1)

7.3

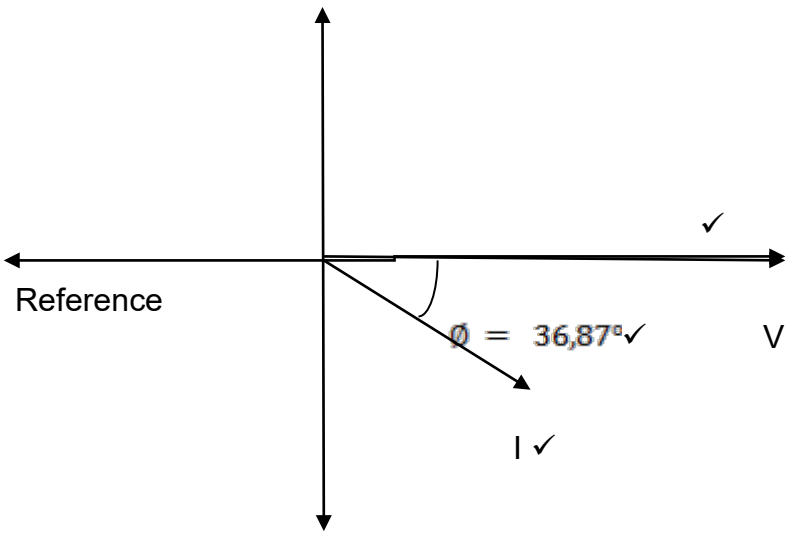

(3)
[10]

QUESTION 8

8.1
- Operate at a very high efficiency
- Small in size
- Have good voltage regulation
- Relatively cheap
- Has only one winding and therefore saving copper (Any 3 × 1) (3)

8.2 8.2.1 $V_{L1} = V_{p1} = 11\,000$ (1)

8.2.2 $Turns\ ratio = \frac{V_{p1}}{V_{p2}} = \frac{11\,000}{500} = 22:1$ (2)

8.2.3 $I_{p1} = I_{p2}\left(\frac{N_2}{N_1}\right) = (180)\left(\frac{1}{22}\right) = 8,182\ A$

$\therefore I_{L1} = \sqrt{3}(8,182) = 14,172\ A$ (2)

8.2.4 $S = \frac{\sqrt{3}V_1 I_{L1}}{1\,000} = \frac{\sqrt{3}(11\,000)(14,172)}{1\,000} = 270,013\ kVA$ (2)
[10]

QUESTION 9

9.1 9.1.1 $I_{sh} = 9 - 15 \times 10^{-3} = 8{,}985\,A$ √

$$R_{sh} = \frac{I_m R_m}{I_{sh}} = \frac{(15\times10^{-3})(60)}{8{,}985}\surd = 0{,}1\,\Omega\surd$$ (3)

9.1.2 $R_{se} = \frac{V}{I_m} - R_m$

$$R_{se} = \frac{80}{15\times10^{-3}} - 60\surd\surd = 5\,273{,}333\,\Omega\surd$$ (3)

9.2 9.2.1
- The primary current must first be switched off.
- Short-circuit the secondary winding by means of the short-circuit switch provided by the manufacturer. (2)

9.2.2 This is to direct all harmful energy to ground. (1)

9.3 P_T = 18 + (-4,7) = 13,3 kW (1)
[10]

QUESTION 10

10.1
- Used as high-speed switches
- Used as amplifiers (2)

10.2 Possible outputs = $2^n = 2^4 = 16$ (2)

10.3

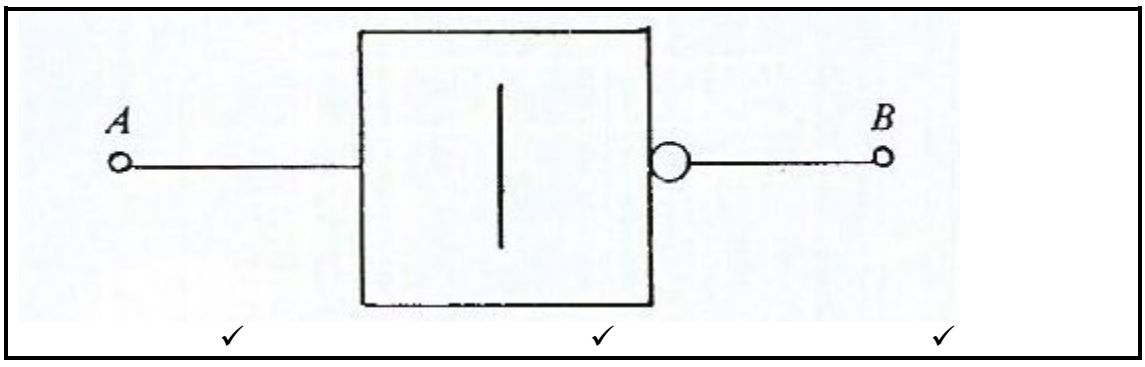

✓ ✓ ✓ (3)

10.4
$$\begin{array}{rr} & 1011 \\ - & 110 \\ \hline & 101 \end{array}$$

(1 mark for each digit in the answer) (3)
[10]

TOTAL: 100

Copyright reserved