higher education & training

Department:
Higher Education and Training
REPUBLIC OF SOUTH AFRICA

MARKING GUIDELINE

NATIONAL CERTIFICATE

ELECTRO-TECHNOLOGY N3

6 AUGUST 2018

This marking guideline consists of 8 pages.

Copyright reserved

QUESTION 1

1.1 Torque is a rotational force that produces angular motion.

OR

Torque produces rotation. (Any 1 × 2) (2)

1.2
- Bearings are used to support rotating armature.
- Bearings are used to minimise friction. (2)

1.3

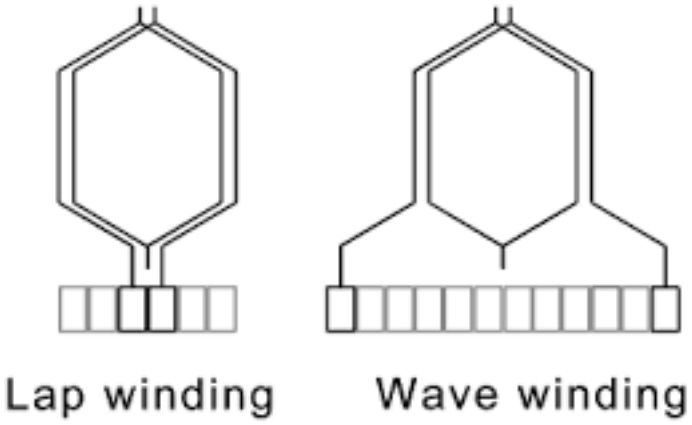

(2 x 2) (4)

1.4
- Bedding of brushes refers to changing the square face of a new brush to a concave face.
- Bedding is done when the brushes are ground with emery paper so that it takes on the arc of the commutator. (2)

[10]

QUESTION 2

2.1
- Faraday's law of electromagnetic induction states that when a conductor or coil cuts or is cut by magnetic flux an emf is induced in it.
- Faraday's law of electromagnetic induction states that an emf or open- circuit voltage is always induced in a coil whenever the magnetic flux linking with the coil changes. (Any 1 × 3) (3)

2.2 2.2.1 Interpoles are located midway between the main poles. (1)

2.2.2 Armature current (I_a) (1)

2.3 2.3.1 $E = V + I_a R_a$
$= 400 + (30)(0{,}25)$✓
$= 407{,}5\ \text{V}$✓ (2)

2.3.2 $I_{sh} = \frac{V}{R_{sh}} = \frac{400}{180} = 2{,}222\ \text{A}$✓

$I_L = I_a - I_{sh} = 30 - 2{,}222 = 27{,}778\ \text{A}$✓

$P_o = VI_L = (400)(27{,}778) = 11{,}111\ \text{kW}$✓ (3)

[10]

QUESTION 3

3.1

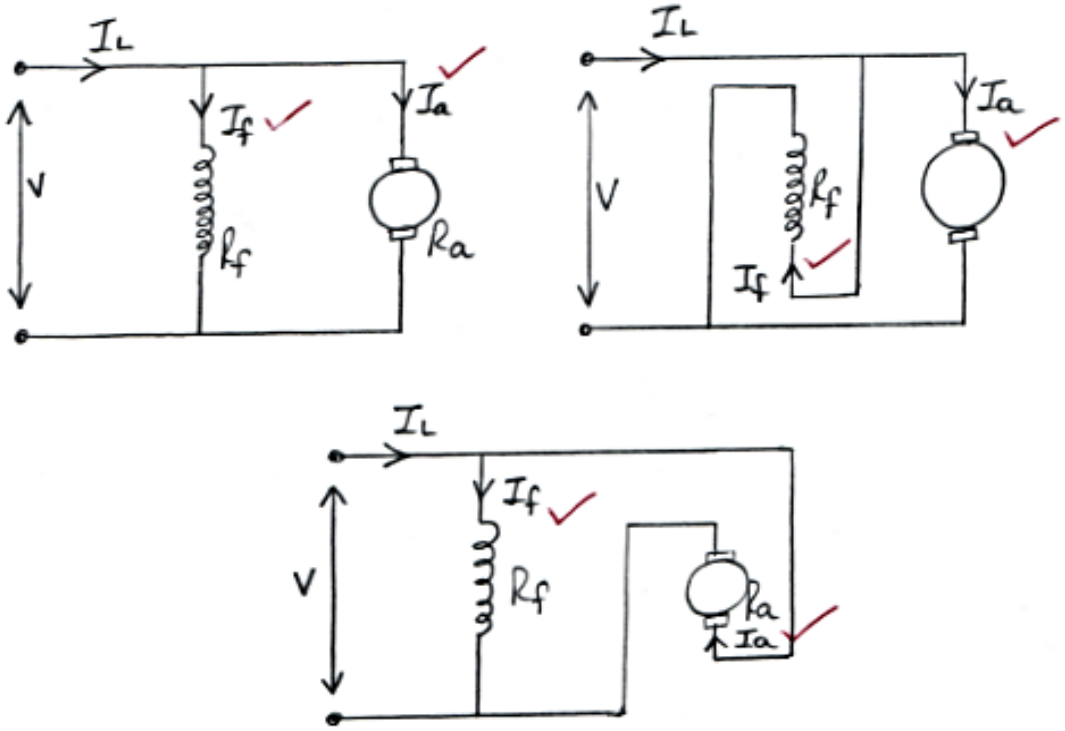

(6)

3.2 $E = V - I_aR_a + I_aR_{se}$

$= 400 - (35)(0{,}15 + 0{,}2)$✓

$= 387{,}75\ \text{V}$✓

$E = \frac{2\emptyset NpZ}{60\,c}$

$N = \frac{60\,Ec}{2\emptyset pz}$

$= \frac{(60)(387{,}75)(2)}{(2)(33\times10^{-3})(3)(740)}$ ✓

$= 317{,}568\ \text{r/min}$✓ (4)

[10]

QUESTION 4

4.1 4.1.1 Friction losses occur in the form of heat in bearings as well as between the brushes and commutator.

4.1.2 Windage losses occur when the armature and cooling fan try to overcome air or wind resistance.

(2 × 2) (4)

4.2 $P_o = VI_L$

$I_L = \frac{22\times10^3}{300} = 73{,}333\text{ A} = I_1$ ✓✓

$\eta = \sqrt{\frac{I_1}{I_1 + I_2}} \times 100\%$

$= \sqrt{\frac{73{,}333}{73{,}333+12}} \times 100\%$✓

$= 92{,}702\%$✓ (4)

4.3 In a differential compound motor, the magnetic fields, produced by the series and shunt windings, oppose each other. The result will form a weaker resultant magnetic field. (2)

[10]

QUESTION 5

5.1 The rms value of an alternating current represents that value of alternating current that produces the same amount of heat as its direct current equivalent. (3)

5.2 A period is the length of time in seconds taken by a waveform to complete a full cycle. (2)

5.3 5.3.1 $E_{avg} = \frac{e_1+e_2+e_3+e_4+e_5+e_6}{6}$

$= \frac{32+41+47+65+56+29}{6}$✓

$= 45\text{ V}$✓ (2)

5.3.2 $E_{rms} = \sqrt{\frac{e_1^2+e_2^2+e_3^2+e_4^2+e_5^2+e_6^2}{6}}$

$= \sqrt{\frac{32^2+41^2+47^2+65^2+56^2+29^2}{6}}$✓

$= 46{,}755\text{ V}$✓ (2)

5.3.3 $k_f = \frac{E_{rms}}{E_{avg}} = \frac{46{,}755}{45} = 1{,}039$ (1)

[10]

QUESTION 6

6.1 $P = VI\cos\emptyset$

$I = \frac{3\,000}{(240)(1)} = 12{,}5\text{ A}$✓

$R = \frac{240}{12{,}5} = 19{,}2\ \Omega$✓ (2)

6.2 $Z = \frac{V}{I} = \frac{400}{12{,}5} = 32\ \Omega$✓

$X_L = \sqrt{Z^2 - R^2}$

$= \sqrt{32^2 - 19{,}2^2}$✓

$= 25{,}6\ \Omega$✓

But $X_L = 2\pi fL$

$L = \frac{25{,}6}{2\pi(50)}$✓

$= 0{,}081\text{ H}$ **OR** $= 81\text{ mH}$✓ (5)

6.3 $\cos\emptyset = \frac{R}{Z} = \frac{19{,}2}{32}$ ✓

$= 0{,}6$ lagging✓✓ (3)
[10]

QUESTION 7

7.1 7.1.1 $X_L = 2\pi fL$

$= 2(\pi)(50)(200 \times 10^{-3})$

$= 62{,}832\ \Omega$✓

$X_c = \frac{1}{2\pi fC}$

$= \frac{1}{2(\pi)(50)(125\times10^{-6})}$

$= 25{,}465\ \Omega$✓

$Z_T = \sqrt{R^2 + (X_L - X_C)^2}$

$= \sqrt{65^2 + (62{,}832 - 25{,}465)^2}$

$= 74{,}975\ \Omega$✓ (3)

7.1.2 $I_T = \frac{V_T}{Z_T} = \frac{150}{74{,}975}$✓

$= 2\ \text{A}$✓ (2)

7.1.3 For resonance

$f = \frac{1}{2\pi\sqrt{LC}}$

$= \frac{1}{2\pi\sqrt{(200\times10^{-3})(125\times10^{-6})}}$✓

$= 31{,}831\ \text{Hz}$✓ (2)

7.2

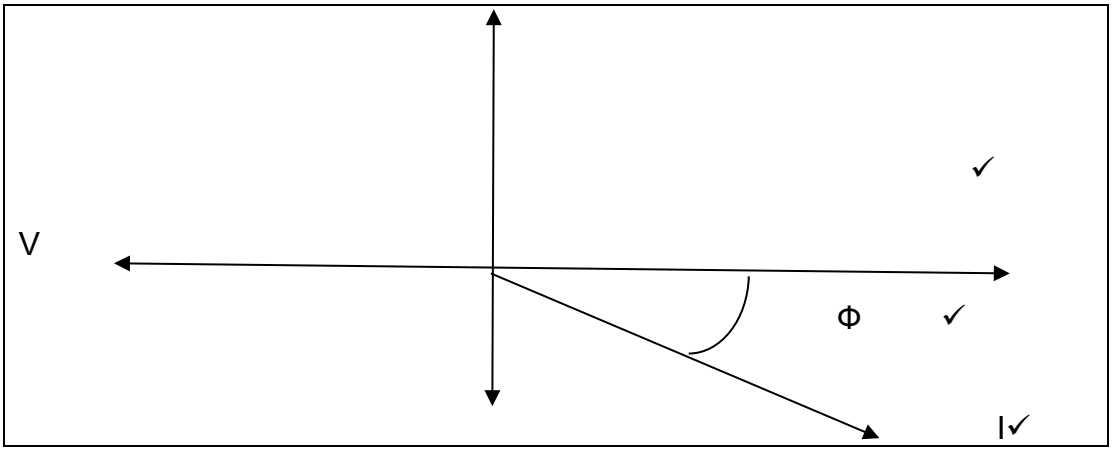

(3)
[10]

QUESTION 8

8.1
- Eddy current losses
- Hysteresis losses (2)

8.2 8.2.1

$$V_{p1} = \frac{V_{L1}}{\sqrt{3}} = \frac{2\,200}{\sqrt{3}} = 1\,270{,}171\text{ V}\checkmark$$

$$V_{p2} = V_{p1}\frac{N_2}{N_1} = (1\,270{,}171)\left(\frac{120}{600}\right)\checkmark$$

$$= 254{,}034\text{ V}\checkmark$$

$$V_{L2} = V_{p2} = 254{,}034\text{ V}\checkmark$$

8.2.2

$$V_{p1} = V_{L1} = 2\,200\text{ V}\checkmark$$

$$V_{p2} = V_{p1}\frac{N_2}{N_1} = (2\,200)\left(\frac{120}{600}\right)\checkmark$$

$$= 440\text{ V}\checkmark$$

$$V_{L2} = \sqrt{3}\,V_{p2} = 762{,}102\text{ V}\checkmark$$

(2 × 4) (8)
[10]

QUESTION 9

9.1 9.1.1 5 A
9.1.2 110 V

(2 × 1) (2)

9.2 9.2.1

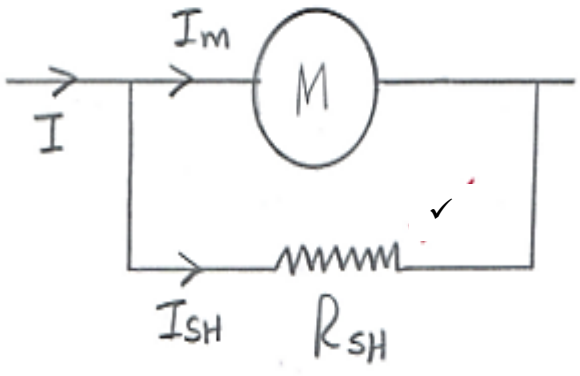

$$I_{sh} = I - I_m = 7 - 0{,}03 = 6{,}97\text{ A}\checkmark$$

$$R_{sh} = \frac{I_m R_m}{I_{sh}} = \frac{(0{,}03)(70)}{6{,}97}\checkmark$$

$$= 0{,}301\ \Omega\checkmark$$

(4)

9.2.2

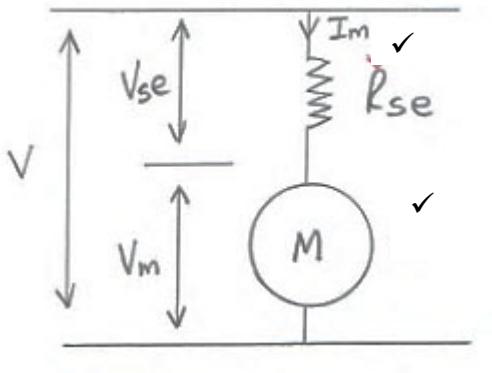

$$R_{se} = \frac{V}{I_m} - R_m$$

$$= \frac{150}{0,03} - 70\checkmark$$

$$= 4\,930\ \Omega\checkmark$$

(4)
[10]

QUESTION 10

10.1

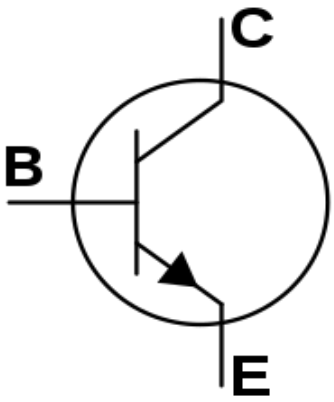

C = COLLECTOR; ✓
E = EMITTER; ✓
B = BASE ✓ CORRECT DRAWING ✓ (4)

10.2
- Motor speed control
- Regulated power supplies
- Battery chargers
- Relay control (Any 2 × 1) (2)

10.3 110
+ 110
1100

(Award a mark for each digit in the answer) (4)
[10]

TOTAL: 100

Copyright reserved