higher education & training

Department:
Higher Education and Training
REPUBLIC OF SOUTH AFRICA

MARKING GUIDELINE

NATIONAL CERTIFICATE

ELECTRO-TECHNOLOGY N3

21 APRIL 2021

This marking guideline consists of 8 pages.

Copyright reserved

QUESTION 1

1.1 Rotor
1.2 Eddy current loss
1.3 Roller bearing
1.4 Soldering
1.5 Torque
1.6 Motor
1.7 Commutator
1.8 Pole shoes
1.9 Lap windings
1.10 Wave windings

(10 × 1) **[10]**

QUESTION 2

2.1
- Series generator
- Shunt generator
- Compound generator OR Long-shunt generator OR Short-shunt generator (3)

2.2

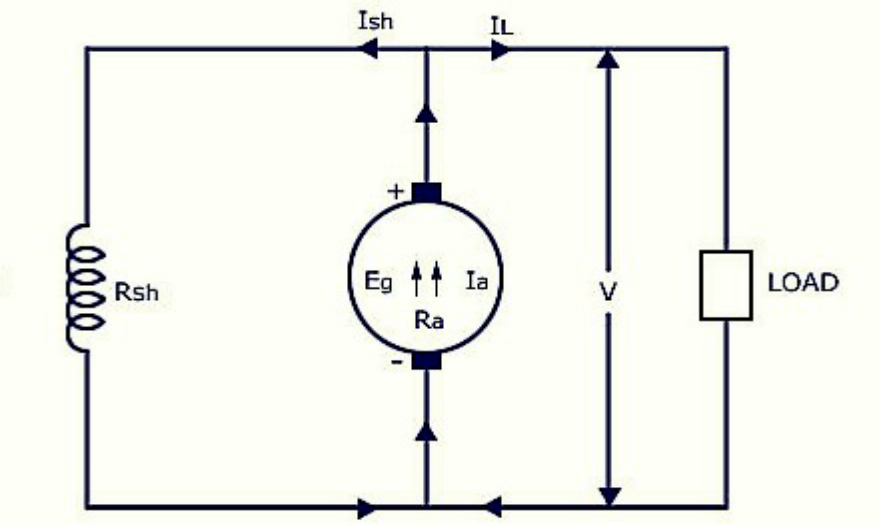

Armature = 1
Field windings = 1
Load = ½
Armature current = ½
Field current = ½
Load current = ½ (4)

2.3 The full-load terminal voltage is less than the no-load terminal voltage.

OR

The shunt field is the more dominant field. (2)

2.4 Armature current (1)

[10]

QUESTION 3

3.1

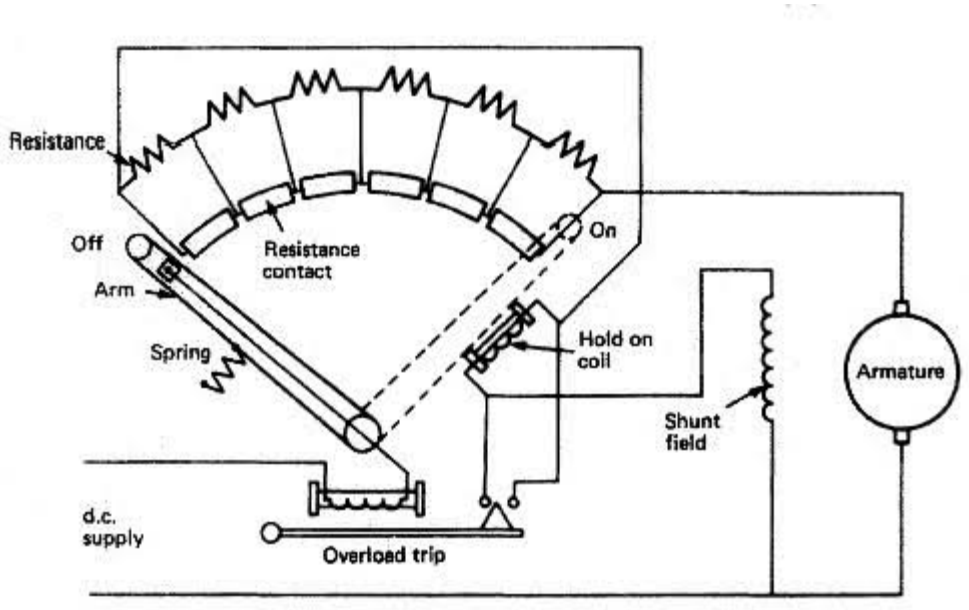

(Each labelled component = 1)(6 x 1) (6)

3.2 $P_i = \frac{P_o}{\eta} = \frac{12000}{0,93} = 12,903\ kW$✓

$P_i = VI_L \qquad I_L = I_a = \frac{12,903\times10^3}{300} = 43,01\ A$✓

$E = V - I_aR_a - I_aR_{se} = 300 - 43,01(0,15 + 0,2) = 284,947\ V$✓

$N = \frac{E}{k\emptyset} = \frac{284,947}{(15)(36\times10^{-3})} = 527,68\ r/min$✓ (4)

[10]

QUESTION 4

4.1 4.1.1 $P_o = VI_L \quad I_L = \frac{15\times10^3}{400} = 37,5\ A$✓

$I_{sh} = \frac{V}{R_{sh}} = \frac{400}{160} = 2,5\ A$✓

$I_a = I_L + I_{sh} = 37,5 + 2,5 = 40\ A$✓ (3)

4.1.2 $Armature\ copper\ loss = I_a^2R_a = (40)^2(0,25) = 400\ W$ (2)

4.1.3 $Shuntfield\ copper\ loss = I_{sh}^2R_{sh} = (2,5)^2(160) = 1\ 000\ W$✓ (1)

4.1.4 $\eta_{gen} = \frac{VI}{VI+I_a^2R_a+IsV+C}\times100\%$✓

$\eta_{gen} = \frac{15\ 000}{15\ 000 + 400 + 1\ 000 + 550}\times100\%$✓ $= 88,496\ \%$ (2)

4.2 4.2.1 Swinburne method OR summation of losses OR Indirect method

4.2.2 Hopkinson back-to-back test or regenerative method

(2 × 1) (2)
[10]

QUESTION 5

5.1
- Capacitor banks
- Phase advancers
- Over-excited synchronous motors or condensers (Any 2 × 1) (2)

5.2 5.2.1 $199{,}75 = 240\sin(1\,570t \times 57{,}3)$✓
$\sin(1\,570t \times 57{,}3) = \frac{199{,}75}{240}$
$1\,570t \times 57{,}3 = 56{,}305°$✓
$\therefore t = 0{,}626\,ms$✓ (3)

5.2.2 $240 = 240\sin(1\,570t \times 57{,}3)$✓
$\sin(1\,570t \times 57{,}3) = \frac{240}{240}$
$1\,570t \times 57{,}3 = 90°$ ✓
$\therefore t = 1\,ms$ ✓ (3)

5.2.3 $e = 240\sin[1\,570(0{,}5 \times 10^{-3})(57{,}3)]$✓
$= 240(0{,}707)$
$= 169{,}68\,V$✓ (2)
[10]

QUESTION 6

6.1

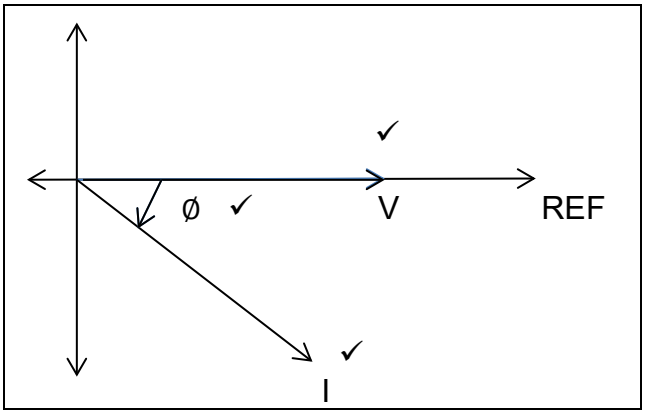

(3)

6.2 $\cos Ø = 0{,}9 \quad \therefore Ø = 25{,}842°$ ✓ (1)

6.3 $P = VI\cos Ø = (200)(4{,}5)\,(0{,}9)$✓ $= 810\,W$ ✓ (2)

6.4 $Q = VI\sin Ø = (200)(4{,}5)\,(\sin 25{,}842°$ ✓$) = 392{,}302\,VAr$ ✓ (2)

6.5 Inductive load✓ because it has a lagging power factor.✓ (2)
[10]

QUESTION 7

7.1 7.1.1 $P = \sqrt{3}\ V_L\ I_L \cos \phi$

$S = \sqrt{3}\ V_L\ I_L$

$Q = \sqrt{3}\ V_L\ I_L \sin \phi$

7.1.2 $P = 3V_{ph}\ I_{ph} \cos \phi$

$S = 3\ V_{ph}\ I_{ph}$

$Q = 3\ V_{ph}\ I_{ph} \sin \phi$

(3 × 2) (6)

7.2

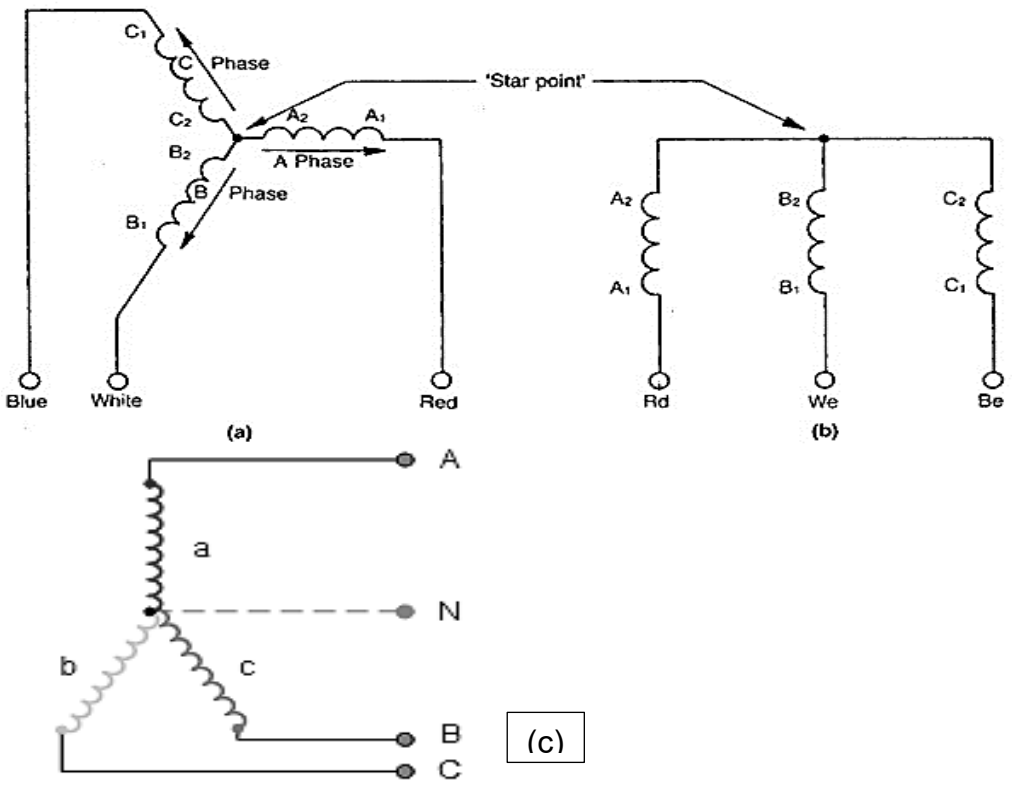

Each terminal = ½ (3)

7.3 Delta connection. (1)

[10]

QUESTION 8

8.1

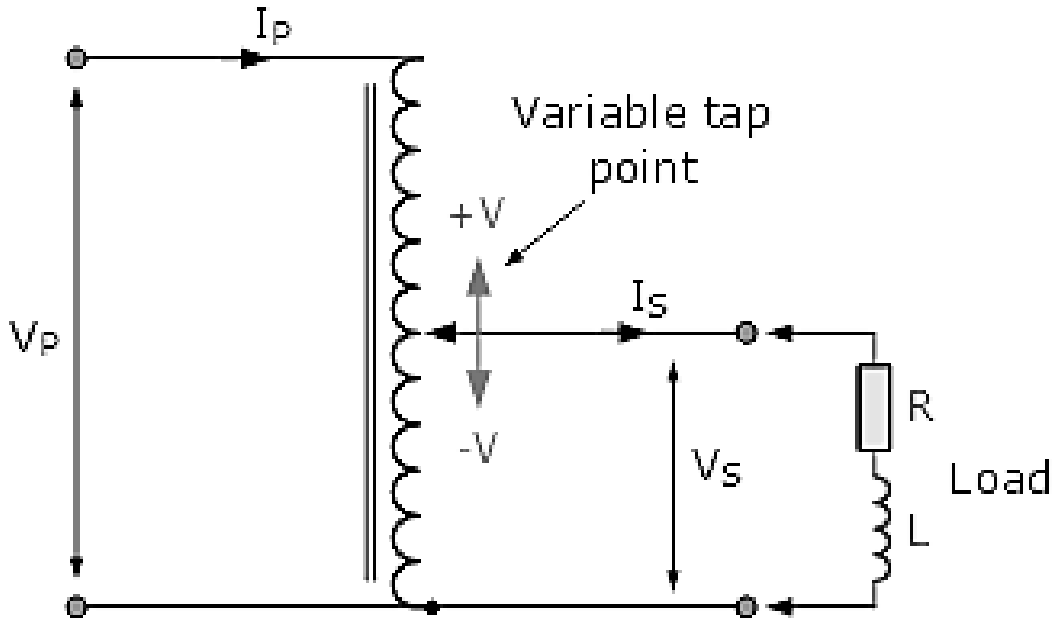

Supply voltage = 1
Winding = 1
Load = 1 (3)

8.2 8.2.1 $V_{P1} = \frac{V_{L1}}{\sqrt{3}} = \frac{3\,300}{\sqrt{3}} = 1\,905{,}256\ V$ (1)

8.2.2 $Turns\ ratio = \frac{V_{P1}}{V_{P2}} = \frac{1\,905{,}256}{240}$ ✓ = 7,939 : 1 ✓ (2)

8.2.3 $I_{P2} = \frac{I_{L2}}{\sqrt{3}} = \frac{145}{\sqrt{3}} = 83{,}716\ A$✓

$\frac{I_{P2}}{I_{P1}} = \frac{V_{P1}}{V_{P2}}$

$I_{P1} = I_{P2}\left(\frac{V_{P2}}{V_{P1}}\right) = (83{,}716)\left(\frac{240}{1\,905{,}256}\right) = 10{,}545\ A = I_{L1}$✓ (2)

8.2.4 $S = \sqrt{3}V_{L1}I_{L1} = \frac{\sqrt{3}(3\,300)(10{,}545)}{1\,000}$ ✓ = $60{,}273\ kVA$ ✓ (2)

[10]

QUESTION 9

9.1 9.1.1 Deflecting mechanism - produces a defecting torque or mechanical force which causes the spindle to rotate.

9.1.2 Controlling mechanism – produces controlling torque
OR
Determines the magnitude of the deflection and in turn indicates the magnitude of the quantity to be measured
OR
Returns the pointer to zero after the measurement has been made.

- 9.1.3 Damping mechanism – produces damping torque which minimises oscillation of the pointer and enables it reach its final position quickly. (3×1) (3)

9.2 9.2.1
- Relatively cheap
- Have a robust or strong construction
- Can be used to measure both AC and DC quantities

(Any 2 x 1)

9.2.2
- Reasonably difficult to calibrate
- Accuracy is influenced by stray magnetic fields and temperature
- They have non-linear scales (Any 2 x 1)

(2 × 2) (4)

9.3

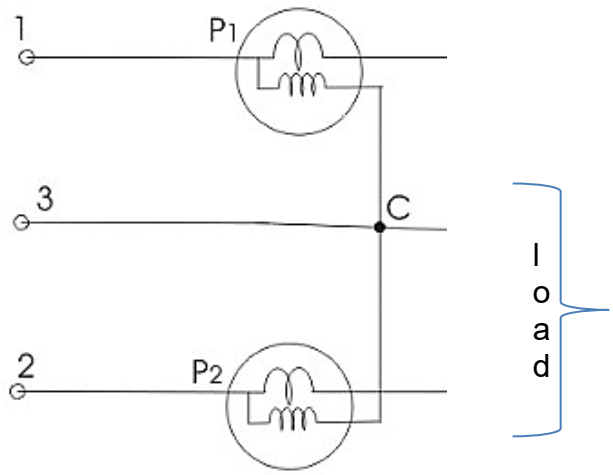

Watt meters = 1
Load = 1 (3)
[10]

QUESTION 10

10.1
- Relay control
- Motor speed control
- Regulated power supplies
- Battery chargers
- Lamp dimming
- Time delay circuits
- Phase controls
- Heater controls
- Static switches (Any 3 × 1) (3)

10.2

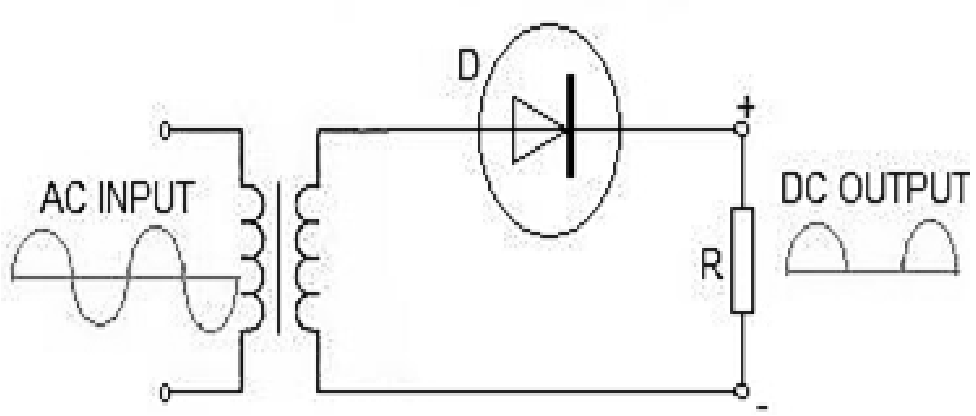

Input waveform = 1
Output waveform = 1
Diode = 1
Transformer = ½
Load = ½ (4)

10.3

$$\begin{array}{r} 1\ 1\ 0\ 1\ 0 \\ +\quad 1\ 1\ 1\ 1 \\ \hline 1\ 0\ 1\ 0\ 0\ 1_2 \end{array}$$ ✓✓✓

Each place value = ½ (3)

[10]

TOTAL: 100

Copyright reserved