higher education & training

Department:
Higher Education and Training
REPUBLIC OF SOUTH AFRICA

MARKING GUIDELINE

NATIONAL CERTIFICATE

ELECTRO-TECHNOLOGY N3

11 APRIL 2018

This marking guideline consists of 8 pages.

Copyright reserved

QUESTION 1

1.1
- Robust or strong ✓
- Can withstand high operating temperatures ✓ (2)

1.2 To prevent them from moving out of position✓ due to the centrifugal force of the armature. ✓ (2)

1.3

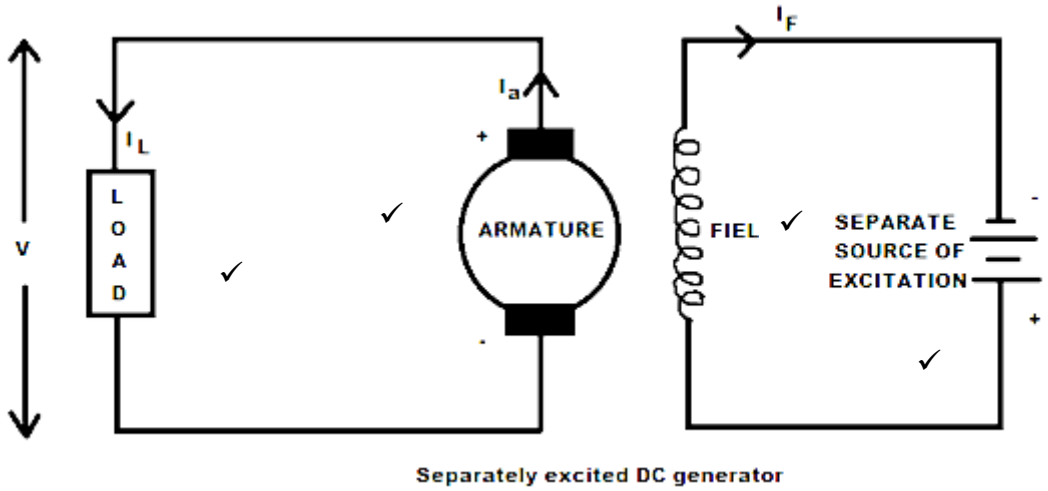

Separately excited DC generator

(4)

1.4
- Carbon
- Graphite
- Electro-graphite
- Copper-graphite (Any 2 × 1) (2)

[10]

QUESTION 2

2.1
- Series
- Shunt
- Short-shunt
- Long-shunt
- Series-parallel or compound (Any 3 × 1) (3)

Copyright reserved

2.2

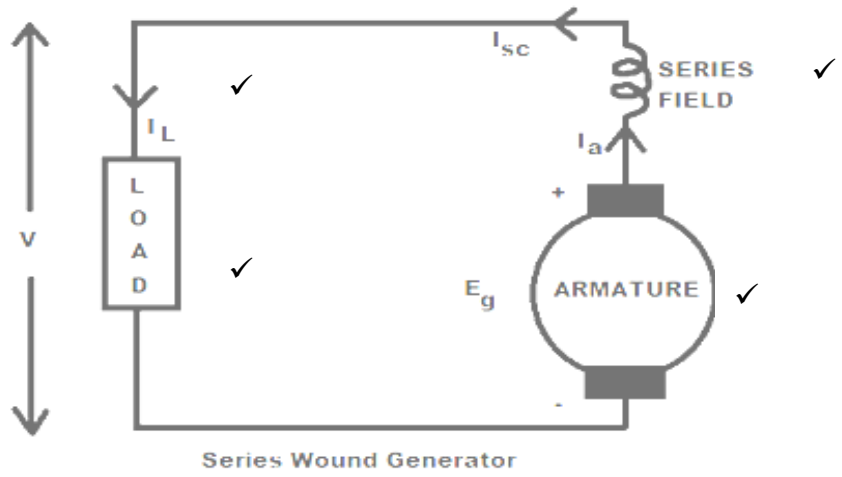

(4)

2.3 In a cumulative compound-wound generator, the two field coils carry current in the same direction. The resultant flux is therefore the sum of the two magnetic fluxes. ✓
The series and the shunt field coils are connected in such a way that the fields support each other. ✓ (2)

2.4 Armature current (I_a) (1)
[10]

QUESTION 3

3.1

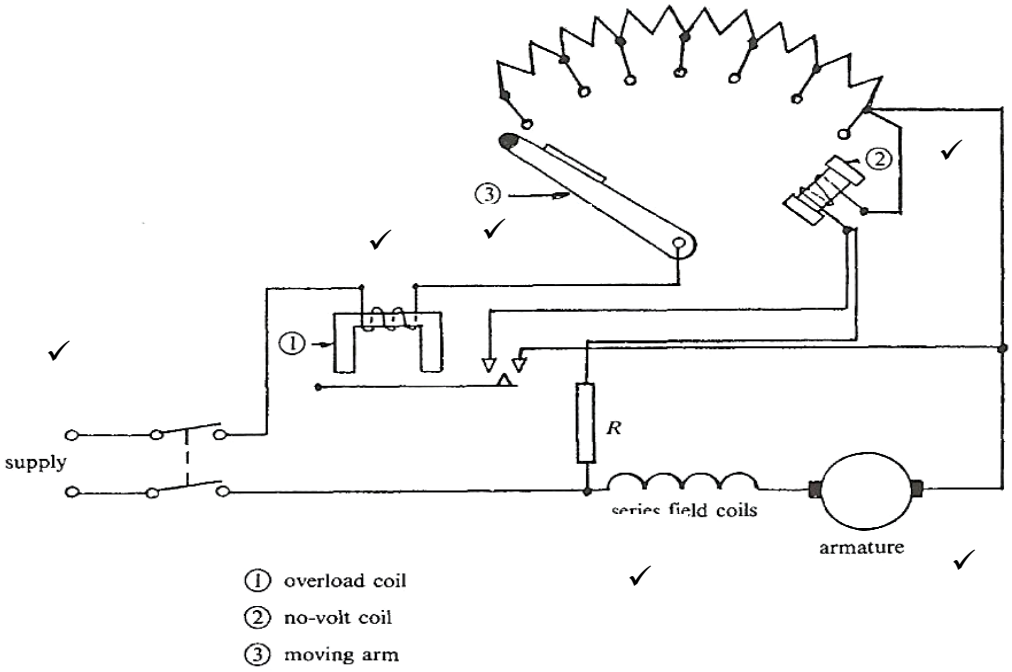

(6)

3.2 $I_{sh} = \frac{V}{R_{sh}} = \frac{300}{200} = 1{,}5\ A$✓

$I_a = I_L - I_{sh} = 45 - 1{,}5 = 43{,}5\ A$✓

$E = V - I_a R_a = 300 - (43{,}5)(0{,}3) = 286{,}95\ V$✓

$N = \frac{E}{k\emptyset} = \frac{286{,}95}{(12)(25\times10^{-3})} = 956{,}5\ r/min$✓

(4)
[10]

QUESTION 4

4.1
- Eddy current losses
- Hysteresis losses

(2)

4.2

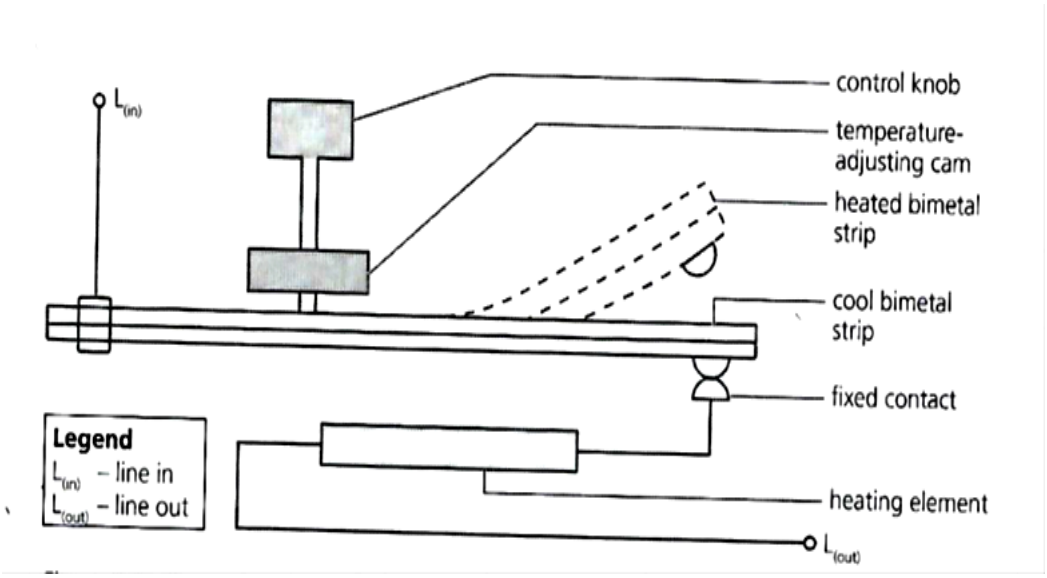

(Any 4 x 1 mark) (4)

4.3 $P_i = VI = (200)(2{,}5) = 500\ W$✓

$P_o = 2\pi nr(W - S)$

$= 2\pi(20)(0{,}015)(436 - 210)$✓

= 426 W✓

$\eta = \frac{P_o}{P_i} \times 100\% = \frac{426}{500} \times 100\% = 85{,}2\ \%$✓

(4)
[10]

QUESTION 5

5.1.1 $E_m = 240\,V$✓ (1)

5.1.2 $E_{avg} = 0{,}637\,E_m = 0{,}637(240) = 152{,}88\,V$✓ (1)

5.1.3 $E_{rms} = 0{,}707\,E_m = 0{,}707(240) = 169{,}68\,V$✓ (1)

5.1.4 $k_f = \frac{E_{rms}}{E_{avg}} = \frac{169{,}68}{152{,}88} = 1{,}11$✓ (1)

5.1.5 $\omega = 2\pi f = 471{,}239$✓

$f = \frac{471{,}239}{2\pi} = 75\ Hz$✓ (2)

5.2
- Costs the consumer more
- Thicker cables have to be used
- Reduces the efficiency of the plant
- Increased I^2R losses
- Limits the output of both generators and transformers (Any 4 × 1) (4)

[10]

QUESTION 6

6.1 $X_L = 2\pi fl = (2)(\pi)(50)(65 \times 10^{-3}) = 20{,}42\ \Omega$✓

$X_c = \frac{1}{2\pi fC} = \frac{1}{(2)(\pi)(50)(90\times10^{-6})} = 35{,}368\,\Omega$✓

$I_R = \frac{V}{R} = \frac{220}{60} = 3{,}667\,A$✓

$I_L = \frac{V}{X_L} = \frac{220}{20{,}42} = 10{,}774\,A$✓

$I_c = \frac{V}{X_c} = \frac{220}{35{,}368} = 6{,}22\,A$✓ (5)

6.2 $I_T = \sqrt{I_R^2 + (I_L - I_C)^2}$

$= \sqrt{3{,}667^2 + (10{,}774 - 6{,}22)^2}$✓

= 5,847 A✓ (2)

6.3 $Z_T = \frac{V_T}{I_T} = \frac{220}{5{,}847} = 37{,}626\ \Omega$ (1)

6.4 $\cos\emptyset = \frac{I_R}{I_T} = \frac{3{,}667}{5{,}847}$✓

$= 0{,}627\ lagging$✓ (2)

[10]

QUESTION 7

7.1 For resonance: $X_L = X_C$

$2\pi fL = \frac{1}{2\pi fC}$ ✓

$2^2\pi^2 f^2 LC = 1$

$f^2 = \frac{1}{2^2\pi^2 LC}$ ✓

$f = \frac{1}{2\pi\sqrt{LC}}$ ✓ (3)

7.2

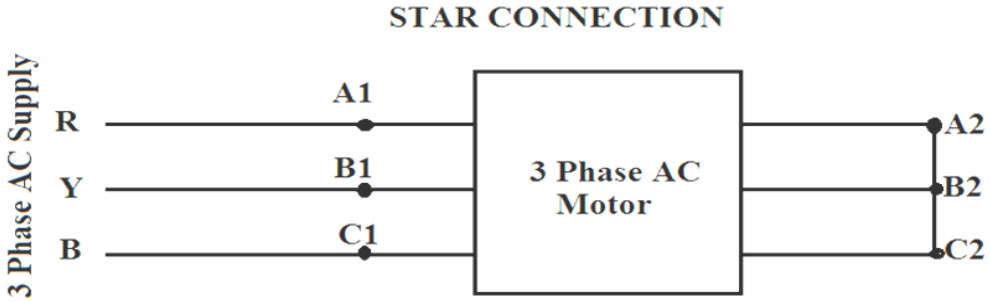

✓✓ ✓✓ (4)

7.3
- Capacitor banks in parallel with the load
- Over-excited synchronous motors
- Phase advancers

(Any 2 × 1) (2)

7.4 True (1)

[10]

QUESTION 8

8.1

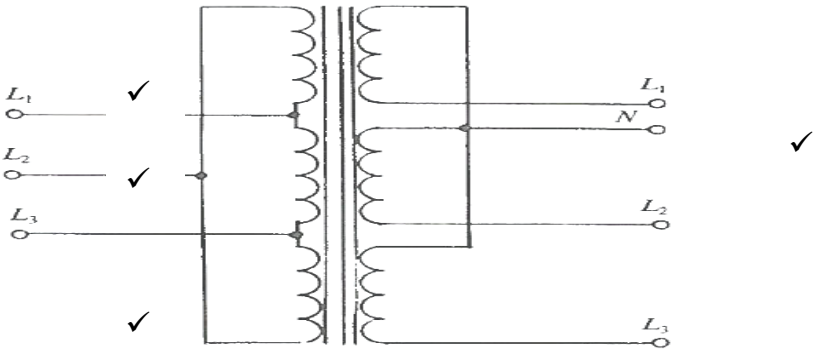

✓ ✓ ✓ ✓ (4)

8.2.1 $V_{p1} = V_{L1} = 6\,600\,V$

Turns ratio
$= 30:1$ ✓

$= \frac{N_1}{N_2} = \frac{V_{p1}}{V_{p2}} = \frac{6\,600}{220}$ ✓ (2)

= 30:1

8.2.2 $I_{p1} = I_{p2}\frac{N_2}{N_1} = (200)\left(\frac{1}{30}\right) = 6{,}667\,A$✓

$I_{L1} = \sqrt{3}\,I_{p1} = \sqrt{3}\,(6{,}667) = 11{,}548\,A$✓ (2)

8.2.3 $S = \sqrt{3}\,V_{L1}I_{L1} \div 1\,000$

$= \sqrt{3}(6\,600)(11{,}548) \div 1\,000$ ✓

= 132,011 kVA✓ (2)
[10]

QUESTION 9

9.1
- The controlling mechanism produces the controlling torque ✓
- It also returns the pointer to zero after the measurement has been made.✓ (2)

9.2

ADVANTAGES	DISADVANTAGES
• Very accurate readings • Can measure both AC and DC • Not affected by stray magnetic fields	• Relatively expensive • Have non-linear or uneven scales • Has a delicate construction
Any 2 x1	Any 2 x 1

(4)

9.3

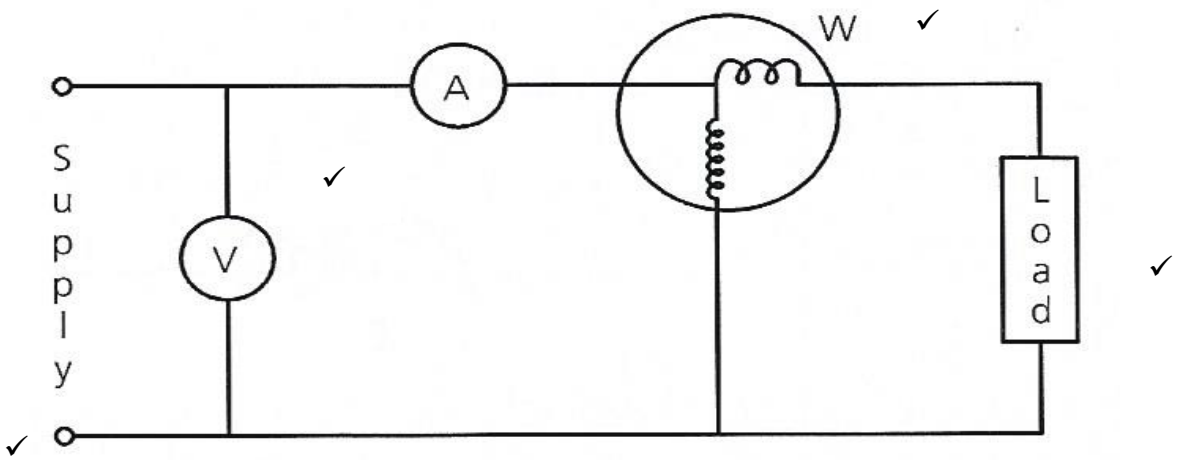

(4)
[10]

QUESTION 10

10.1
- Used to conduct current when forward biased.
- Used to block current flow when reversed biased.
- Used to convert AC to DC

Any 2 x 1 (2)

10.2

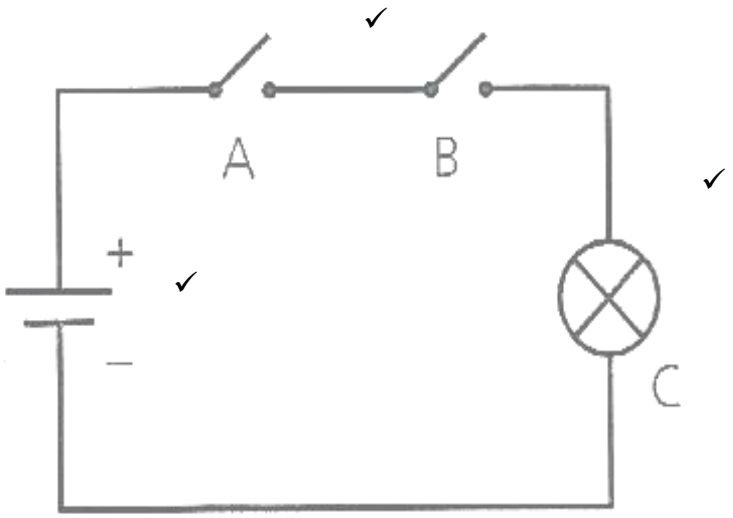

(3)

10.3
$$\begin{array}{r} 10010 \\ -\ 1011 \\ \hline 111 \end{array}$$

Allocate 1 mark each for each of the digits ✓✓✓

$(1 \times 2^2) + (1 \times 2^1) + (1 \times 2^0) = 7$ ✓✓ (5)

[10]

TOTAL: 100

Copyright reserved