higher education & training

Department:
Higher Education and Training
REPUBLIC OF SOUTH AFRICA

MARKING GUIDELINE

NATIONAL CERTIFICATE

ELECTROTECHNICS N6

10 AUGUST 2021

This marking guideline consists of 10 pages.

Copyright reserved

QUESTION 1: DC MACHINES

1.1 1.1.1 The speed increases with an increase of armature voltage,✓but not in direct proportion.✓

1.1.2 The speed is inversely proportional to the field current✓if the poles are unsaturated.✓

(2 × 2) (4)

1.2 Given: A 350 V, DC series motor

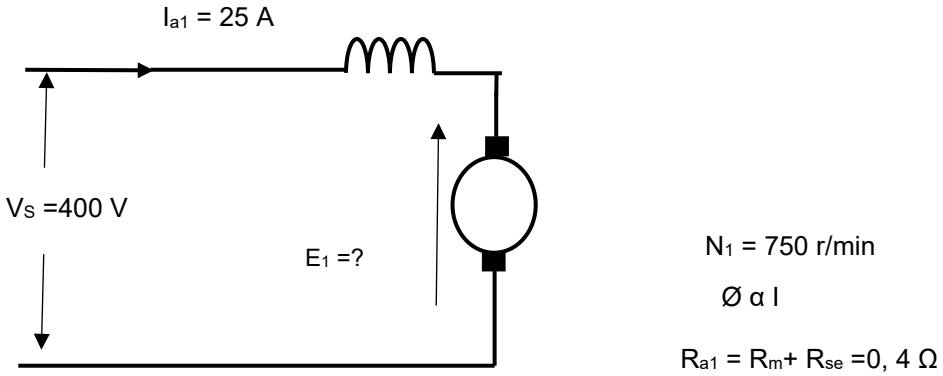

1.2.1 The speed when it takes a current of 40 A:

$$E_1 = V_S - I_1 R_a$$
$$= 400 - (25 \times 0{,}4) = 390\ \text{V}\ ✓$$

$$E_2 = V_S - I_{a2} R_a = 400 - (40 \times 0{,}4) = 384\ \text{V}\ ✓$$

$$\frac{E_2}{E_1} = \frac{N_2 I_{a2}}{N_1 I_{a1}}\ ✓$$

$$\therefore N_2 = \frac{E_2}{E_1} \times \frac{N_1 I_{a1}}{I_{a2}}\ ✓$$

$$= \frac{384}{390} \times \frac{750 \times 25}{40}\ ✓$$

$$= 461{,}538\ \text{r/min}\ ✓$$

(6)

1.2.2 The ratio of the TWO torques developed:

$$\frac{T_2}{T_1} = \frac{I_{a2} \emptyset_2}{I_{a1} \emptyset_1}$$

$$= \frac{(I_{a2})^2}{(I_{a1})^2}\ ✓$$

$$= \frac{(40)^2}{(25)^2}\ ✓$$

$$\therefore T_2 : T_1 = 2{,}56 : 1 ✓$$

(3)
[13]

QUESTION 2: AC CIRCUIT THEORY

2.1 A complex wave comprises of a series of sinusoidal waves,✓
i.e., a fundamental wave and various harmonic waves.✓ (2)

2.2 Given: A parallel connected electrical circuit consisting of a resistor and an inductor

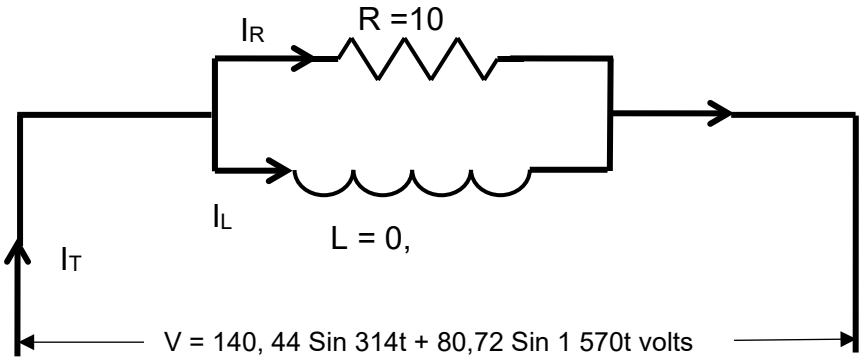

2.2.1 The power absorbed by the circuit:

$$E_{RMS} = \sqrt{\frac{{E_{M1}}^2 + {E_{M2}}^2}{2}}$$
$$= \sqrt{\frac{140,44^2 + 80,72^2}{2}} \checkmark$$
$$= \mathbf{114,541\ V} \checkmark$$

$$P = \frac{{E_{RMS}}^2}{R} = \frac{114,541^2}{10}$$
$$= \mathbf{1\,311,964\ W} \checkmark$$ (3)

2.2.2 The RMS value of the current supplied to the circuit:

Fundamental

$$X_{L1} = 2 \cdot \pi \cdot f \cdot L = 314 \times 0,02$$
$$= 6,28\ \Omega \checkmark$$

$$Z_{P1} = \frac{R \cdot X_{L1}}{R + X_{L1}}$$
$$= \frac{10\angle 0° \times 6,28\angle 90°}{10\angle 0° + 6,28\angle 90°} \checkmark$$
$$= 5,318\angle 57,871°\ \Omega \checkmark$$

$$I_{M1} = \frac{E_{M1}}{Z_{P1}} = \frac{140,44\angle 0°}{5,318\angle 57,871°}$$

$$= 26,408\angle -57,871°\ A \checkmark$$

Fifth harmonic

$$X_{L5} = 2 \cdot \pi \cdot f \cdot L$$
$$= \omega L = 1\,570 \times 0,02$$
$$= 31,4\ \Omega \checkmark$$

or

$$X_{L5} = 5 \cdot X_{L1} = 5 \times 6,28$$
$$= 31,4\ \Omega \checkmark$$

$$Z_{P5} = \frac{R \cdot X_{L5}}{R + X_{L5}}$$
$$= \frac{10\angle 0° \times 31,4\angle 90°}{10\angle 0° + 31,4\angle 90°} \checkmark$$
$$= 9,528\angle 17,665°\ \Omega \checkmark$$

$$I_{M5} = \frac{E_{M5}}{Z_{P5}} = \frac{80,72\angle 0°}{9,528\angle 17,665°}$$
$$= 8,472\angle -17,665°\ A \checkmark$$

$$I_{RMS} = \sqrt{\frac{{I_{M1}}^2 + {I_{M2}}^2}{2}}$$
$$= \sqrt{\frac{26,408^2 + 8,472^2}{2}} \checkmark$$
$$= 19,611\ A \checkmark$$ (10)

[15]

QUESTION 3: TRANSFORMERS

3.1 The voltage regulation of a transformer is the rise or fall✓ in secondary terminal voltage when the load is removed✓ and the applied voltage remains the same.✓ (3)

3.2
- Increased dielectric stresses
- Electrostatic interference with communication circuits
- Resonance between the inductance of the transformer windings and the capacitance of a feeder to which they are connected (Any 2 × 1) (2)

3.3 Given: A single-phase, transformer
V_1 = 1 800/450 V, 50 Hz Z = (0, 6 + j4, 4) Ω.
pf = 0.8 lagging S = 250 kVA,

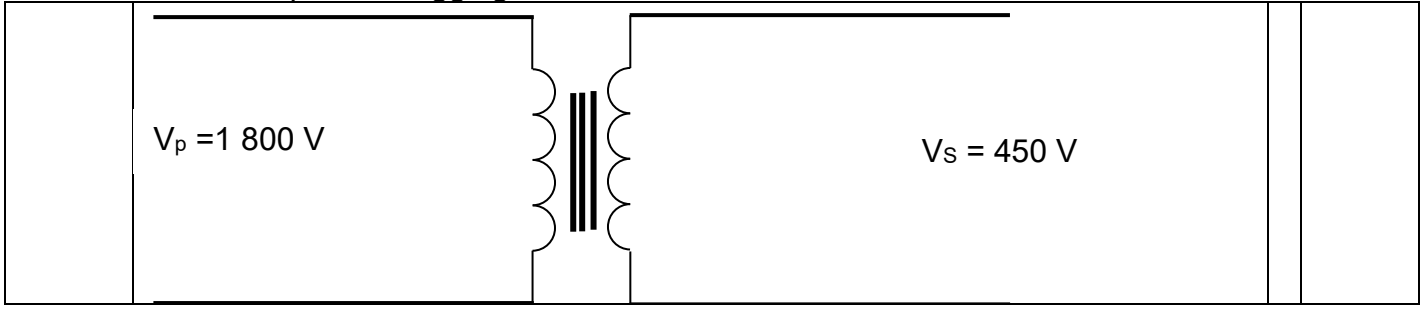

3.3.1 The turns ratio

$$\frac{N_1}{N_2} = \frac{V_1}{V_2} = \frac{1\,800}{450} = \frac{4}{1} \checkmark$$

$$\therefore \mathrm{N_1 : N_2} = \mathbf{4 : 1} \checkmark \quad (2)$$

3.3.2 The percentage resistance

$$\mathrm{I_1} = \frac{S}{V_1} = \frac{250\,000}{1\,800} = 138,889\ A \checkmark$$

$$\%\mathrm{R} = \frac{\mathrm{I_1 . R_{e1}}}{\mathrm{V_1}} \times 100\% = \frac{138,889 \times 0,6}{1\,800} \times 100\% \checkmark$$
$$= \mathbf{4,63}\% \checkmark \quad (3)$$

3.3.3 The percentage reactance

$$\%\mathrm{X} = \frac{\mathrm{I_1 . X_{e1}}}{\mathrm{V_1}} \times 100\%$$
$$= \frac{138,889 \times 4,4}{1\,800} \times 100\% \checkmark$$
$$= \mathbf{33,951}\% \checkmark \quad (2)$$

3.3.4 The full-load copper losses

$$\mathrm{P_{SC}} = (\mathrm{I_1})^2 . \mathrm{R_{e1}}$$
$$= (138,889)^2 \times 0,6 \checkmark$$
$$= \mathbf{11,574\ k\Omega} \checkmark \quad (2)$$

3.3.5 The power factor at which a maximum regulation occurs:

$$\mathrm{Z_e} = \mathrm{R_e} + \mathrm{jX_e} = 0,6 + \mathrm{j}4,4$$
$$= \mathbf{4,441 \angle 82,235°\ \Omega} \checkmark$$

Method 1

$$\mathrm{Cos}\,\theta_2 = \frac{R_E}{Z_e} = \frac{0,6}{4,441} = \mathbf{0,135} \checkmark$$

Method 2

$$\mathrm{Cos}\,\theta_2 = \cos 82,235 = \mathbf{0,135} \quad (2)$$

3.3.6 The primary applied voltage to circulate full-load secondary current:

$$\mathrm{V_{1SC}} = \mathrm{I_1 . Z_{e1}} = 138,889 \times 4,441 \checkmark = \mathbf{616,806\ V} \checkmark \quad (2)$$

[18]

QUESTION 4: AC MACHINES – ALTERNATORS

Given: A three-phase, star-connected alternator.

E_L = 3 600 V	f = 50 Hz
N = 500 r/min	slots/pole/ph = 3
Z/slot = 20	distribution factor is 0, 96

ALL conductors per phase connected in series, the coils full pitched

4.1 The number of poles

$$f = \frac{N \cdot p}{60}$$

$$\therefore p = \frac{60 \cdot f}{N} \checkmark$$

$$= \frac{60 \times 50}{500} = 6 \text{ pairs} \checkmark$$

$$\text{Number of poles} = 6 \times 2 = 12 \checkmark$$ (3)

4.2 The useful flux per pole

$$E_P = \frac{E_L}{\sqrt{3}} = \frac{3\,600}{\sqrt{3}} = \mathbf{2\,078,461\ V} \checkmark$$

n = Number of slots/poles/phases

number of slots/poles/phases = n × number of phases = 3 × 3 = 9 ✓

Number of slots/poles = number of slots ÷ number of poles

Number of slots = number of slots/poles × number of poles

= 9 ×12 = 108 ✓

Z = total conductors in series per phase = (108 ×20) ÷3 = 720 ✓

$$E_p = 2k_F.k_D.k_P.f.\Phi.Z$$

$$\Phi = \frac{E_p}{2.k_F.k_D.k_P.f.Z} \checkmark$$

$$= \frac{2\,078{,}461}{2 \times 1{,}11 \times 0{,}96 \times 1 \times 50 \times 720} \checkmark\checkmark$$

$$= 27{,}09\ mWb \checkmark$$ (8)

[11]

QUESTION 5: AC MACHINES – SYNCHRONOUS MOTORS

5.1 A *synchronous capacitor* is an over-excited synchronous motor✓Because, like a capacitor, it takes a leading current.✓ (2)

5.2 Given: A three-phase synchronous motor connected in parallel with a load

$P_1 = 500$ kW
$\text{Cos}\ \theta_3 = 0,9$ lagging
$\text{Cos}\ \theta_1 = 0,75$ lagging
$P_3 = 100$ kW

5.2.1 The kVA input to the motor

Before the installation of the synchronous motor

$$\theta_1 = \text{Cos}^{-1}\,0,75 \text{ lagging}$$
$$= \mathbf{-41,41°}$$

$$S_1 = \frac{P_1}{\text{Cos}\,\theta_1}$$
$$= \frac{500}{0,75} \checkmark$$
$$= \mathbf{666,667\angle -41,41° \text{ kVA}} \checkmark$$

After the installation of the synchronous motor

$$\theta_3 = \text{Cos}^{-1}\,0,9 \text{ lagging}$$
$$= \mathbf{-25,842°}$$

$$P_3 = P_1 + P_2 = 500 + 100 = 600 \text{ kW} \checkmark$$

$$S_3 = \frac{P_3}{\text{Cos}\,\theta_3} = \frac{600}{0,9} \checkmark$$

$$= 666,667\angle -25,842° \text{ kVA°} \checkmark$$

$$S_2 = S_3 - S_1$$
$$= 666,667\angle -25,842° - 666,667\angle -41,41° \checkmark$$
$$= 180,585\angle 56,374° \text{ kVA} \checkmark$$ (7)

5.2.2 The power factor of the motor

$$\text{Power factor} = \text{Cos}\,\theta$$
$$= \cos 56,374°$$
$$= 0,554 \text{ Leading} \checkmark$$ (1)

[10]

QUESTION 6: AC MACHINES – INDUCTION MOTORS

6.1 Synchronous watts are that torque✓
that would develop a power of one watt✓
at the synchronous speed of the machine under consideration, (2)

6.2 TWO main parts of parts of an induction motor are:

- Stator
- Rotor (2)

6.3 Given: The rotor of a three-phase induction motor
V = 440 V f = 50-Hz
P_{in} = 100 kW f_r = 120 rpm

6.3.1 The slip:

$$f_{rotor} = s \cdot f$$
$$\frac{120}{60} = s \times 50 \checkmark$$
$$2 = 50 \times s$$
$$\therefore s = \frac{2}{50} = 0,04 \checkmark$$

6.3.2 The rotor speed:

$$N_s = 120 \times \frac{50}{6}$$
$$= 1\,000 \text{ r/min} \checkmark$$

$$N_r = 1\,000(1 - 0{,}04) = 960 \text{ r/min} \checkmark$$

6.3.3 The mechanical power developed:

$$P_{machanical} = (1 - s) \cdot P_2$$
$$= (1 - 0,04) \times 100 \checkmark$$
$$= \mathbf{96\ kW} \checkmark$$

6.3.4 The rotor copper loss per phase:

$$\text{Total rotor Cu loss} = s \cdot P_2 = 0,04 \times 100 \checkmark$$
$$= 4 \text{ kW} \checkmark$$

6.3.5 The speed of the stator field with respect to the rotor:

$$N_{stator} = N_s - N_r$$
$$= 1\,000 - 960 \checkmark$$
$$= 40 \text{ r/min} \checkmark$$

(5 × 2) (10)
[14]

QUESTION 7: GENERATION AND SUPPLY OF AC

7.1 The regulation of a transmission line is the rise or fall in voltage✓ at the receiving end when the full-load is thrown off,✓ while the sending end voltage remains constant✓. (3)

7.2 The effects of a poor power factor:

- Leads to an increased power consumption, causing more greenhouse gas emission.
- The consumer pays more in the form of maximum demand charges.
- Increased volt drops occur due to increased load current.
- Increased I^2R losses (copper losses) occur.
- The plant suffers reduced efficiency.
- It limits the power output of generators and transformers.
- It decreases the lifespan of equipment. (Any 3 × 1) (3)

7.3 *Given:* A 150 km, 3-phase transmission line

P = 15 MW; C = 0, 00863 µF/km/ph
V_L = 90 kV; R = 0, 285 Ω/km/ph
f = 50 Hz pf = 0, 8 lagging;
L = 1, 845 mH/km/ph

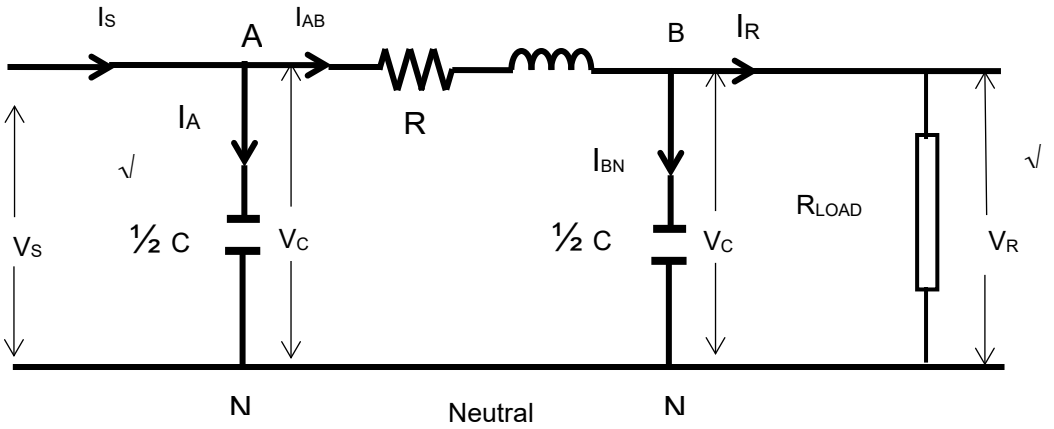

$X_{L/ph} = 2\pi fL = 2 \times \pi \times 50 \times 1,845 \times 10^{-3} \times 150 = 86,944\ \Omega\ \surd$

$R_{/ph} = 0,285 \times 150 = 42,75\ \boldsymbol{\Omega}\surd$

$Z_{AB} = R + jX_L = 42,75 + j86,944 = 96,886\angle \mathbf{63,817°}\ \boldsymbol{\Omega}\ \surd$

$$\frac{C}{2} = \frac{0,00863 \times 10^{-6} \times 150}{2} = 0,647\ \boldsymbol{\mu F}$$

$$\therefore X_C = \frac{1}{2 \cdot \pi \cdot f \cdot \frac{C}{2}}$$

$$= \frac{1}{2 \times \pi \times 50 \times 0,647 \times 10^{-6}} = 4\,919,782\ \Omega\ \surd$$

$Z_{BN} = 0 - jX_C = 0 - j4\,919,782$
$= \mathbf{4\,919,\ 782\angle -90°\ \Omega}\surd$

$V_R = \frac{V_L}{\sqrt{3}} = \frac{90 \times 10^3}{\sqrt{3}} = \mathbf{51\,961,524\angle 0°\ V}\ \surd$

$I_{BN} = \frac{V_R}{Z_{BN}} = \frac{51\,961,524\angle 0°}{4\,919,782\angle -90°} = 10,562\mathbf{\angle 90°\ A}\ \surd$

$P = \sqrt{3} V_L I_L \cos\theta$
$I_R = \frac{P}{\sqrt{3} \cdot V_L \cdot \cos\theta} = \frac{15 \times 10^6}{\sqrt{3} \times 90 \times 10^3 \times 0,8}$
$= \mathbf{120,281\angle -36,87°\ A}\surd$

$I_{AB} = I_R + I_{BN} = 120,281\angle -36,87° + 10,562\angle 90°$
$= \mathbf{114,257\angle -32,628°\ A}\ \surd$

$V_{AB} = I_{AB} \cdot Z_{AB} = 114,257\angle -32,628° \times 96,886\angle 63,817°$
$= \mathbf{11\,069,904\angle 31,189°\ V}\ \surd$

$V_S = V_R + V_{AB} = 51\,961,524\angle 0° + 11\,069,904\angle 31,189°$ V ✓
$= \mathbf{61\,698,328\angle 5,331°\ V}$ ✓

$V_L = \sqrt{3} \cdot V_S = \sqrt{3} \times 61\,698,328 = \mathbf{106\,864,639\angle 5,331°\ V}\surd$

$I_{AN} = \frac{V_S}{Z_{AN}} = \frac{106\,864,639\angle 5,331°}{4\,919,782\angle -90°}$
$= \mathbf{21,721\angle 95,331°\ A}\ \surd$

$Z_{AN} = Z_{BN} = 4\,919,782\angle -90°$
$I_S = I_{AB} + I_{AN} = \mathbf{114,257\angle -32,628°} + \mathbf{21,721\angle 95,331°}$ ✓
$= \mathbf{102,34\angle -22,995°\ A}$ ✓

Power factor $= \cos\theta = \cos(5,331° + 22,995°)$ ✓
$= \mathbf{0,880\ Leading}$ ✓ (13)
[19]

TOTAL: 100

Copyright reserved