higher education & training

Department:
Higher Education and Training
REPUBLIC OF SOUTH AFRICA

MARKING GUIDELINE

NATIONAL CERTIFICATE

ELECTROTECHNICS N6

7 AUGUST 2019

This marking guideline consists of 11 pages.

Copyright reserved

QUESTION 1: DC MACHINES

1.1 Given: A series motor

.

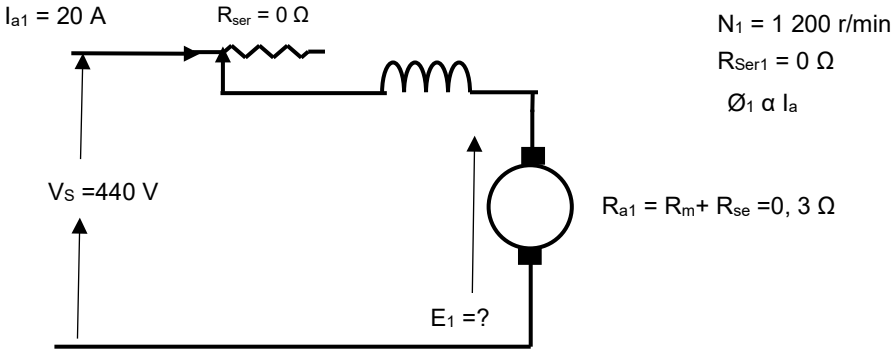

1.1.1

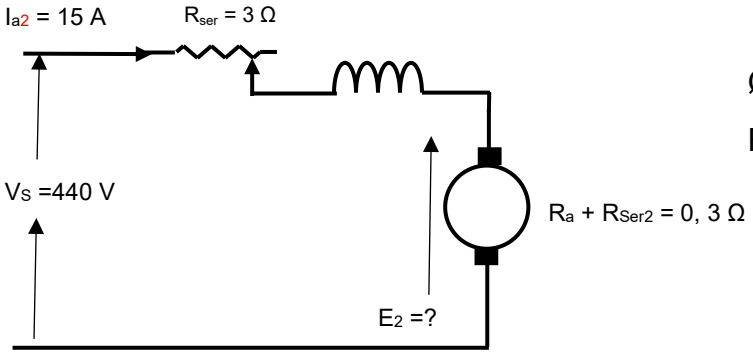

$$E_1 = V - I_{a1}R_{a1} = 440 - (20 \times 0,3) \checkmark = 440 - 6 = 434\ V \checkmark$$

$$E_2 = V - I_{a2}R_{a2} = 440 - 15(3 + 0,3) \checkmark = 440 - 49,5$$
$$= 390,5\ V \checkmark$$

$$\frac{E_2}{E_1} = \frac{N_2 Ø_2}{N_1 Ø_1} \quad \therefore N_2 = \frac{E_2}{E_1} \times \frac{N_1 Ø_1}{Ø_2} = \frac{390,5}{434} \times \frac{1\,200 \times 1}{0,8} \checkmark$$
$$= 1\,349,654 \text{ r/min} \checkmark \qquad (6)$$

1.1.2 $P_1 \propto Ø_1 \cdot N_1 \cdot I_{a1}$ $P_2 \propto Ø_2 \cdot N_2 \cdot I_{a2}$

$$\frac{P_1}{P_2} = \frac{Ø_1 \cdot N_1 \cdot I_{a1}}{Ø_2 \cdot N_2 \cdot I_{a2}} = \frac{Ø_1 \times 1\,200 \times 20}{0,8 \times Ø_1 \times 1\,349,654 \times 15} \checkmark$$
$$= 1,482 \checkmark \qquad (2)$$

1.2 Advantages:
- It is convenient and economical.
- The efficiency can be predetermined at any load.

Disadvantages:
- No account is taken of the change in iron losses from no-load to full-load.
- As the test is on no-load, it is impossible to know whether the commutation would be satisfactory at full-load and whether the temperature rise would be within the specified limit. (2 + 2) (4)

1.3 A DC machine works at maximum efficiency when the constant losses✓ and the armature copper losses are equal.✓ (2)

[14]

QUESTION 2: AC CIRCUIT THEORY

2.1
- Synchronous motors (or capacitors)
- Static capacitors
- Phase advancers (Any 2 × 1) (2)

2.2 Given: Series circuit consisting of a resistor and an inductor.
Take ω = 314 rad/s.

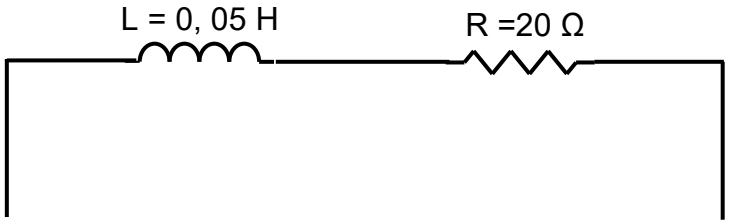

e = 250 sin ωt + 50 sin(3ωt + π/3) + 20 sin(5ωt + 5π/6) volts

2.2.1
$$i = \frac{250}{25,431}\text{Sin}(\omega t - 38,146°)\ \checkmark + \frac{50}{51,192}\text{Sin}(3\omega t + 60° - 67°)\ \checkmark + \frac{20}{81,065}\text{Sin}(5\omega t + 150° - 75,713°)\ \checkmark$$
$$= 9,831\ \text{Sin}(\omega t - 38,146°) + 0,977\ \text{Sin}(3\omega t - 7°) + 0,247\ \text{Sin}(5\omega t + 74,287°)\ \checkmark$$
(4)

2.2.2
$$I_{RMS} = \sqrt{\frac{{I_{M1}}^2}{2} + \frac{{I_{M3}}^2}{2} + \frac{{I_{M5}}^2}{2}}$$
$$= \sqrt{\frac{(9,831)^2}{2} + \frac{(0,977)^2}{2} + \frac{(0,247)^2}{2}}\ \checkmark$$
$$= 6,998\ \text{A}\ \checkmark$$
(2)

2.2.3 $$V_{RMS} = \sqrt{\frac{V_{M1}{}^2}{2} + \frac{V_{M3}{}^2}{2} + \frac{V_{M5}{}^2}{2}} = \sqrt{\frac{(250)^2}{2} + \frac{(50)^2}{2} + \frac{(20)^2}{2}}$$ ✓

$$= 180,831 \text{ V} \checkmark$$ (2)

2.2.4 $$P_T = I^2R = 48.972 \times 20 \checkmark = 979,44 \text{ W} \checkmark$$ (2)

2.2.5 $$\text{pf} = \frac{\text{Watts}}{\text{VI}} = \frac{979,44}{180,831 \times 6,998} \checkmark = 0,774 \checkmark$$ (2)

[14]

QUESTION 3: TRANSFORMERS

Given: A 50 kVA, 4 400/220 V transformer

R_1 = 3, 45 Ω X_1 = 5, 2 Ω
R_2 = 0, 009 Ω X_2 = 0, 015 Ω.

3.1 $$Turns'ratio: \frac{T_1}{T_2} = \frac{V_1}{V_2} = \frac{4\,400}{220} \checkmark = \frac{20}{1} \checkmark$$

$$R^1{}_2 = R_2 \times \left(\frac{T_1}{T_2}\right)^2 = 0,009 \times \left(\frac{20}{1}\right)^2 \checkmark = 3,6\,\Omega \checkmark$$ (4)

3.2 $$X^1{}_2 = X_2 \times \left(\frac{T_1}{T_2}\right)^2 = 0,015 \times \left(\frac{20}{1}\right)^2 \checkmark = 6\,\Omega \checkmark$$ (2)

3.3 $$R_{pT} = R_1 + R^1{}_2 = 3,45 + 3,6 \checkmark = 7,05\,\Omega \checkmark$$

$$X_{pT} = X_1 + X^1{}_2 = 5,2 + 6 \checkmark = 11,2\,\Omega \checkmark$$ (4)

3.4 **Method 1**

$$Z_{pT} = R_{pT} + X_{pT} = 7,05 + j11,2 \checkmark$$
$$= 13,234 \angle 57,811° \,\Omega \checkmark$$

OR

Method 2

$$\text{Z}_{\text{pT}} = \sqrt{\text{R}_{\text{pT}}{}^2 + \text{X}_{\text{pT}}{}^2} = \sqrt{(7,05)^2 + (11,2)^2} \checkmark = 13,234\,\Omega \checkmark$$ (2)

3.5 $I_1 = \frac{S}{V_1} = \frac{50 \times 10^3}{4\,400} = 11,364\ A$ ✓

$I_2 = \frac{S}{V_2} = \frac{50 \times 10^3}{220} = 227,273\ A$✓

$\text{Cu loss} = I_1{}^2 \cdot R_1 + I_2{}^2 \cdot R_2$

$= (11{,}364^2 \times 3,45) + (227,273^2 \times 0{,}009)\surd$

$= 910,412\ W\surd$

AND

$\text{Cu} = I_1{}^2 R_{pT} = (11,364)^2 \times 7,05\ \surd = 910,441\ \Omega\surd$ (4)

[16]

QUESTION 4: AC MACHINES – ALTERNATORS

4.1

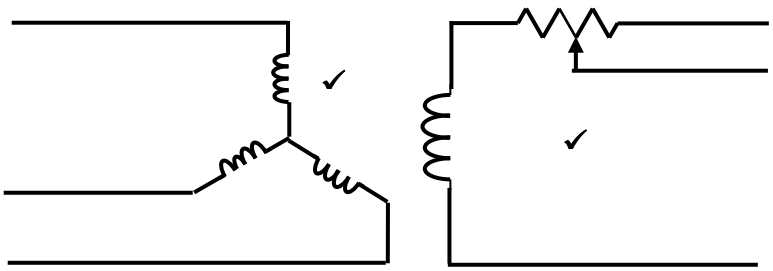

(5)

4.2 Given: A 3-phase, 50-Hz, star-connected alternator

P = 2 000 kW X_s = 3 ohms per/phase

V_L = 11 kV pf = 0, 8 lagging

R_a = 0,25 ohms/phase

Calculating the percentage regulation.

$P = \sqrt{3} \cdot V_L \cdot I_L \cdot \text{Cos}\,\theta$

$I_L = \frac{P}{\sqrt{3} \cdot V_L} = \frac{2\,000 \times 10^3}{\sqrt{3} \times 11\,000}$✓ $= 104,973\ A$✓

$V_p = \frac{V_L}{\sqrt{3}} = \frac{11\,000}{\sqrt{3}} = 6\,350,853\ V$✓

$IR_a = 104,973 \times 0,25 = 26,243 \angle 0°\ V$✓

$IX_S = 104{,}973 \times 3 = 314,919\ V \angle 90°\ V$✓

Method 1

$$E_p = V_p\angle\theta + IR_a\angle 0° + IX_s\angle 90°$$
$$= 6\,350,853\angle 36,87° + 26,243\angle 0° + 314,919\angle 90°\checkmark$$
$$= 6\,565,049\angle 38,932°\ V\checkmark$$

$$\%\ Regulation = \frac{E_p - V_p}{V_p}$$
$$= \frac{6\,565,049 - 6\,350,853}{6\,350,853} \times 100\%\checkmark$$
$$= 3,373\%\checkmark$$

OR

Method 2

$$E_p = \sqrt{\left(V_p \cdot \text{Cos}\,\theta + IR_a\right)^2 + \left(V_p \cdot \text{Sin}\,\theta + IX_s\right)^2}$$
$$= \sqrt{(6\,350,853 \times 0,8 + 26,243)^2 + (6\,350,853 \times 0,6 + 314,919)^2}\checkmark$$
$$= 6\,565,049\ \text{V}\checkmark$$

$$\%\ \text{Regulation} = \frac{E_p - V_p}{V_p} \times 100\%$$
$$= \frac{6\,565,049 - 6\,350,853}{6\,350,853} \times 100\%\ \checkmark$$
$$= 3,373\%\ \checkmark$$

OR

Method 3

$$E_p = V_p + (IR_a \cdot \text{Cos}\,\theta) + (IX_s \cdot \text{Sin}\,\theta)$$
$$= 6\,350,853 + (26,243 \times 0,8) + (314,919 \times 0,6)\checkmark$$
$$= 6\,560,799\ \text{V}\checkmark$$

$$\%\ \text{Regulation} = \frac{E_p - V_p}{V_p} \times 100\%$$
$$= \frac{6\,560,799 - 6\,350,853}{6\,350,853} \times 100\%\ \checkmark$$
$$= 3,306\%\ \checkmark$$

(9)
[14]

QUESTION 5: AC MACHINES – SYNCHRONOUS MOTORS

5.1 Lagging power factor

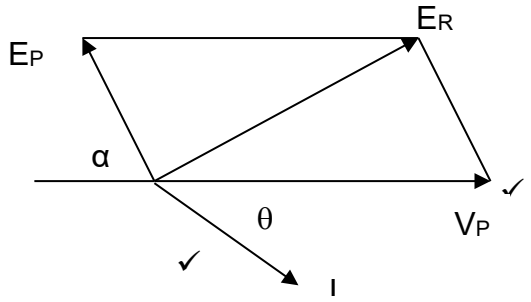

Leading power factor

Increase in excitation increases Ep✓ causes the resultant current to lead.✓

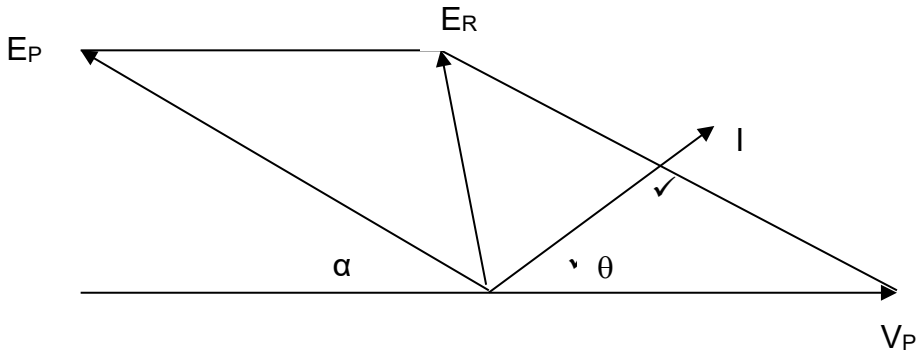

(6)

5.2. Given: a three-phase, 50 Hz, star-connected synchronous motor.

S = 5 kVA	P = 3,5 kW
V_L = 400 V	%Z = (4 + j40)%

5.2.1 $\text{Cos}\,\theta = \frac{P}{S} = \frac{3,5}{5} = 0,7$✓ (1)

5.2.2 $V_L = \sqrt{3} \cdot V_p$

$\therefore\ V_p = \frac{V_L}{\sqrt{3}} = \frac{400}{\sqrt{3}} = 230,94\ V$✓

$\%R = \frac{IR}{V_p}$

$IR = \%R \cdot V_p = 0,04 \times 230,94$

$= 9,238$ V✓

$\%X = \frac{IX}{V_p}$

$IX = \%X \cdot V_p = 0,4 \times 230,94 = 92,376$ V✓ (3)

5.2.3 **Method 1**

$E_p = \text{Vp}\angle -\theta + \text{IRa}\angle 180° + \text{I.Xs}\angle -90°$

$= 230,94\angle -45,573° + 9,238\angle 180° + 92,376\angle -90°$

$= 299,057\angle -59,358°\ \text{V}$✓

$E_L = \sqrt{3}\,.\,\text{Ep} = \sqrt{3} \times 299,057 = 517,982\ \text{V}$

OR

Method 2

$\text{S} = \sqrt{3} \cdot \text{V}_\text{L} \cdot \text{I}_\text{L}$

$I_L = \dfrac{S}{\sqrt{3} \cdot V_L} = \dfrac{5 \times 10^3}{\sqrt{3} \times 400}$✓ $= 7,217\ \text{A}$✓

$\%\text{R} = \dfrac{\text{IR}}{\text{V}_\text{p}}$

$\text{R} = \dfrac{\%\text{R} \cdot \text{V}_\text{p}}{\text{I}} = \dfrac{0,04 \times 230,94}{7,217} = 1,28\ \Omega$

$\%\text{X} = \dfrac{\text{IX}}{\text{V}_\text{p}}$

$\text{X} = \dfrac{\%\text{X} \cdot \text{V}_\text{p}}{\text{I}} = \dfrac{0,4 \times 230,94}{7,217} = 12,8\ \Omega$

$Z_S = R + jX_S = 1,28 + \text{j}12,8 = 12,864 \angle 84,289°\ \Omega$

$E_r = IZ_S = 7,217\angle 45,573° \times 12,864\angle 84,289°$

$= 92,84\angle 129,862°\ \text{V}$✓

$\text{Ep} = \text{Er} - \text{Vp} = 92,84\angle 129,862° - 230,94\angle 0°$

$= 299,060\angle 166,214°\ \text{V}$✓

$E_L = \sqrt{3} \cdot E_p = \sqrt{3} \times 299,060 = 517,987\ \text{V}$✓ (3)

5.2.4

Method 1		**Method 2**
$\alpha = 59,358º - 45,573º$	**OR**	$\alpha = 180 - 166,214º$
$= 13,785º$ ✓		$= 13,786º$ ✓

(1)
[14]

QUESTION 6: AC MACHINES - INDUCTION MOTORS

6.1 Plugging is the stopping of an electric motor✓ by immediately reversing its direction until it stops.✓ (2)

6.2
- Stator
- Rotor (2)

6.3 Given:

No of poles =6	N_2 = 950 r/min.
f = 50 Hz	$P_{stator\ loss}$ = 1 kW
P_{in} = 45 kW	$P_{fric\&wind\ loss}$ = 1,5 kW

6.3.1
$$N_1 = \frac{60 \cdot f}{p} = \frac{60 \times 50}{3} = 1\,000 \text{ r/min} \checkmark$$
$$S = \frac{N_1 - N_2}{N_1} \times 100\%$$
$$= \frac{1\,000 - 950}{1\,000} \times 100\% \checkmark$$
$$= 5\% \checkmark$$
(3)

6.3.2
$$P_{in} = \text{Stator output} + \text{Stator loss}$$
$$\text{Stator output} = P_{in} - \text{Stator loss} = 45 - 1 = 44 \text{ kW} \checkmark$$
$$\text{Stator output} = \text{Rotor input} = 44 \text{ kW}$$
$$\text{Rotor input} = \frac{2 \cdot \pi \cdot N_1 . T}{60}$$
$$T = \frac{60 \cdot \text{Rotor input}}{2 \cdot \pi \cdot N_1} = \frac{60 \times 44 \times 1\,000}{2 \times \pi \times 1\,000}$$
$$= 420,169 \text{ Nm} \checkmark$$
$$\text{Rotor cu. loss} = \frac{2 \cdot \pi \cdot (N_1 - N_2) T}{60}$$
$$= \frac{2 \times \pi \times (1\,000 - 950) \times 420,169}{60} \checkmark$$
$$= 2,2 \text{ kW} \checkmark$$
(4)

6.3.3
$$P_{in} = P_{out} + P_{stator} + P_{rotor} + P_{friction}$$
$$P_{out} = P_{in} - \text{Total losses}$$
$$= 45 - (1 + 1.5 + 2,2) \checkmark$$
$$= 40,3 \text{ kW} \checkmark$$
(2)

6.3.4
$$\eta = \frac{P_{out}}{P_{in}} \times 100\% = \frac{40,3}{45} \times 100\% = 89,556\% \checkmark$$
(1)
[14]

QUESTION 7: GENERATION AND DISTRIBUTION OF AC

Given*:* A 3-phase transmission line

S = 75 MVA C = 0, 03 µF/km/phase
V_L = 132 kV R = 0, 28 Ω/km/phase f = 50 Hz pf = 0,8 lagging X_L = 0,63 Ω/km/phase

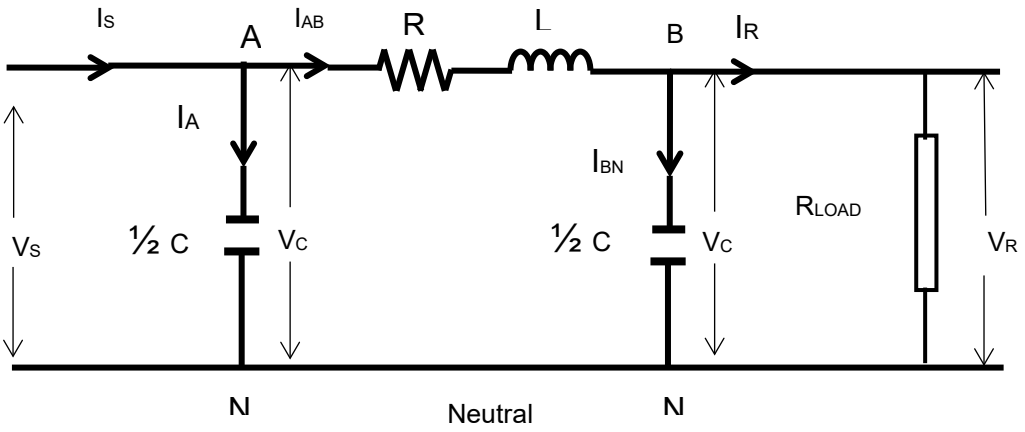

$X_{L/ph} = 0,63 \times 100 = 63\ \Omega$
$R_{/ph} = 0,28 \times 100 = 28\ \Omega$

$Z_{AB} = R + jX_L = 28 + j63 = 68,942\angle 66,038°\ \Omega$✓

$$\frac{C}{2} = \frac{0,03 \times 10^{-6} \times 100}{2} = 1,5\ \mu F$$

$$X_C = \frac{1}{2 \cdot \pi \cdot f \cdot \frac{C}{2}} = \frac{1}{2 \times \pi \times 50 \times 1,5 \times 10^{-6}} = 2\ 122,066\ \Omega$$

$Z_{BN} = 0 - jX_C = 0 - j2\ 122,066 = 2\ 122,066\angle -90°\ \Omega$✓

$$V_R = \frac{V_L}{\sqrt{3}} = \frac{132 \times 10^3}{\sqrt{3}} = 76\ 210,236\angle 0°\ V$$✓

$$I_{BN} = \frac{V_R}{Z_{BN}} = \frac{76\ 210,236\angle 0°}{2\ 122,066\angle -90°} = 35,913\angle 90°\ A$$✓

$S = \sqrt{3} \cdot V_L \cdot I_L$
$$I_L = \frac{S}{\sqrt{3} \cdot V_L} = \frac{75 \times 10^6}{\sqrt{3} \times 132 \times 10^3} = 328,04\angle 36,87°\ A$$✓

$I_{AB} = I_R + I_{BN} = 328,04\angle -36,87° + 35,913\angle 90°$
$= 307,836\angle -31,515°$ A ✓

$V_{AB} = I_{AB} \cdot Z_{AB} = 307{,}836\angle -31{,}515° \times 68{,}942\angle 66{,}038$
$= 21\,222{,}83\angle 34{,}523°$ ✓V

$V_S = V_R + V_{AB} = 76\,210{,}236\angle 0° + 21\,222{,}83\angle 34{,}523°$ V
$= 94\,464{,}55\angle 7{,}315°$ V✓

$V_L = \sqrt{3} \cdot V_S = \sqrt{3} \times 94\,464{,}55 = 163\,617{,}4\ V$ ✓

$I_{AN} = \dfrac{V_S}{Z_{AN}} = \dfrac{163\,617{,}4\angle 7{,}315°}{2\,122{,}066\angle -90°}$ $Z_{AN} = Z_{BN} = 2\,122{,}066\angle -90°$

$= 77{,}103\angle 97{,}315°$ A✓

$I_S = I_{AB} + I_{AN} = 307{,}836\angle -31{,}515° + 77{,}103\angle 97{,}315°$✓

$= 266{,}352\angle -18{,}482°$ A✓

Power factor $= \text{Cos}\ \theta = \text{Cos}\ (18{,}482° + 7{,}315°)$

$= \text{Cos}\ 25{,}797$ ✓ $= 0{,}9$ Leading ✓ **[14]**

TOTAL: 100

Copyright reserved