higher education & training

Department:
Higher Education and Training
REPUBLIC OF SOUTH AFRICA

MARKING GUIDELINE

NATIONAL CERTIFICATE

ELECTROTECHNICS N5

2 August 2021

This marking guideline consists of 8 pages.

Copyright reserved

QUESTION 1

1.1 When the motor is at rest, the value of armature resistance is too low against the current flow through the armature.✓ If the supply voltage is directly across, these windings will cause a dangerously high armature or starting current, which could blow the protection fuses, circuit breakers or starting equipment.✓ To reduce this starting current, a starter is needed until the back emf is sufficient.✓

OR

The emf is zero at starting (E = 0 V),✓ and because the armature resistance is very small, the starting current will be very high✓ (if the full supply voltage is applied). A very high starting current can cause the supply circuit to trip and the motor windings to burn out.✓ (3)

1.2 $T_2 = T_1$
Flux is proportional to field current.

$E_1 = V – I_{a1}(R_a + R_f)$
$= 230 – 30(0,8)$
$= 206$ V✓

$E_2 / 206 = (30 \times 600) / (30 \times 900)$✓
$E_2 = 137,333$ V✓

$T_2 / T_1 = I_{f2} / 30^2$✓
$I_{f2} = 30^2$
$I_{f2} = 30$ A✓

$E_2 = V – I_{a2}(R_a + R_f + R_X)$
$137,333 = 230 – 30(0,8 + R_X)$
$R_X = 2,289\ \Omega$✓ (6)

1.3

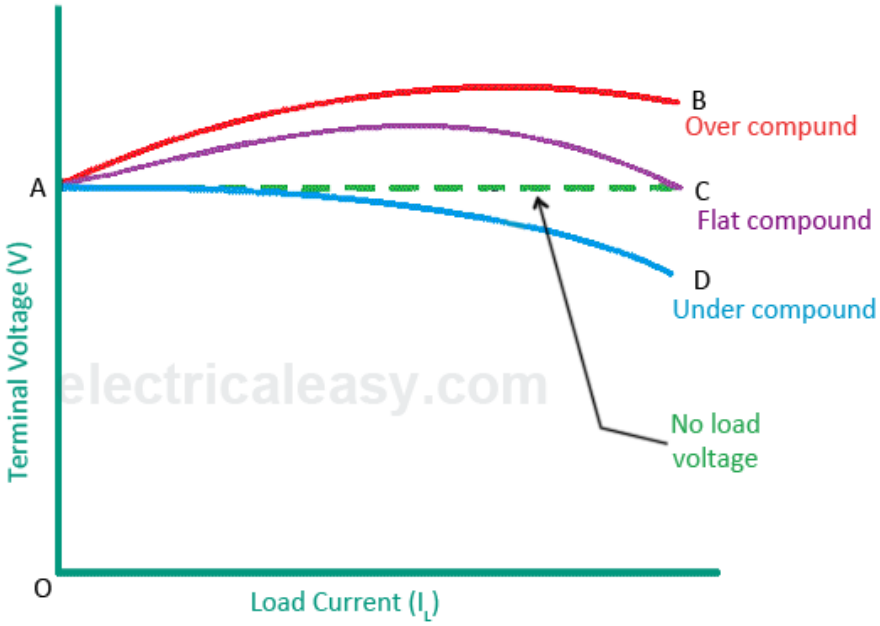

External characteristic of DC compound generator

(1 mark for labelled x-axis)
(1 mark for labelled y-axis)
(1 mark for correct shape and 3 marks for three curves drawn correctly) (6)

1.4 $P_{IN} = P_O + \text{Loss} = 5\,000 + 250 = 5{,}25$ kW✓

$I_L = 5{,}25 \times 10^3 / 250 = 21$ A✓
$I_f = 250 / 250 = 1$ A

$I_a = 21 + 1 = 22$ A✓

$E = 250 + (22 \times 0{,}4)$
$= 258{,}8$ V✓

$T = E\, I_a / (2\pi n)$
$= (258{,}8 \times 22) / (2\pi \times 25)$
$= 36{,}247$ Nm✓ (5)

[20]

QUESTION 2

2.1 2.1.1 $X_L = 2\pi \times 50 \times 0,07 = 21,991\ \Omega$✓ ½
$X_C = (2\pi \times 50 \times 135 \times 10^{-6})^{-1} = 23,579\ \Omega$✓ ½

$Z_{coil} = 30 + j21,991 = 37,197 < 36,24\ \Omega$✓
$Z_{RC} = 20 - j23,579 = 30,919 < -49,69\ \Omega$✓

$Z_T = Z_P = Z_{coil} \times Z_{RC} / (Z_{coil} + Z_{RC})$
$= (37,197 < 36,24 \times 30,919 < -49,69) / 50 - j1,588$✓
$= 1150,094 < -13,45 / 50,025 < -1,82$
$= 22,99 < -11,63\ \Omega$✓

$I_T = 290 < 0 / 22,99 < -11,63$
$= 12,614 < 11,63$ A✓ (6)

2.1.2 $I_{COIL} = 290 < 0 / 37,197 < 36,24$ ✓
$= 7,796 < -36,24$ A ✓
$I_{RC} = 290 < 0 / 30,919 < -49,69$ ✓
$= 9,379 < 49,69$ A ✓ (4)

2.2 2.2.1 $X_A = (2\pi \times 50 \times 170 \times 10^{-6})^{-1}$
$= 18,724\ \Omega$

$Z_A = 6,8 - j18,724$
$= 19,921 <-70,04\ \Omega$ ✓

$I_A = 240 < 0 / 19,921 <-70,04$
$= 12,048 < 70,04$ A✓
$= 4,113 + j11,324$

$I_B = I_T - I_A = 15 + j0 - 4,113 - j11,324$✓
$= 10,887 - j11,324$
$= 15,709 <-46,13$ A✓ (4)

2.2.2 $Z_B = V_S / I_B = 240 < 0 / 15,709 < -46,13$✓
$= 15,278 < 46,13\ \Omega$✓ (2)

2.2.3 $\text{Cos}\ \Theta_B = \text{Cos}\ 46,13 = 0,693$✓ (1)

2.3
- The total impedance of the circuit will simply be its resistance.
- ($X_L = X_C$) and Z = R
- The impedance (Z) will be at its minimum.
- The current drawn from the supply (I), will be at its maximum.
- The circuit will operate at unity power factor. (Any 3 × 1) (3)

[20]

QUESTION 3

3.1
- Iron loss
- Copper loss
- Hysteresis loss
- Eddy current loss
- Stray loss
- Dielectric loss or core losses (Any 3 × 1) (3)

3.2 $Z_E = 0,3 + j0,75 = 0,808 < 68,19\ \Omega$
$Z_2 = 25 + j32,5 = 41,003 < 52,43\ \Omega$

$R_T = R_E + R_2(N_1/N_2)^2$
$= 0,3 + 25(1/3)^2$
$= 3,078\ \Omega$ ✓

$X_T = 0,75 + 32,5(1/3)^2$
$= 4,361\ \Omega$ ✓

$Z_T = 3,078 + j4,361 = 5,338 < 54,79\ \Omega$ ✓

$I_1 = V_1 / Z_T = 230 / 5,338 = 43,087\ A$ ✓

$Reg = I_1 Z_E \cos(\Theta_E - \Theta_2) / V_1$
$= [43,087 \times 0,808 \cos(68,19 - 52,43)] / 230$ ✓
$= 0,146$ p.u ✓

OR

$Reg = I_1 [R_E \cos(\Theta_2) + X_E \cos(\Theta_2)] / V_1$
$= [43,087 \times [0.3 \cos (52,43) + 0,75 \sin (52,43)] / 230$ ✓
$= 0,146$ p.u ✓

$V_2 = 3 \times 230 = 690\ V$✓

$V_{TER} = 690 - (690 \times 0,146)$✓
$= 690 - 100,74$
$= 589,26\ V$✓ (9)

3.3 3.3.1 $\%Z = 4 + j6 = 7,211 < 56,31\ \%$
$\epsilon Z = 7,211 / 100 = 0,072$ p.u✓

$I_1 = S / V_1 = 15 X 10^3 / 1800 = 8,333\ A$✓

$Z_E = \epsilon Z\ V_1 / I_1 = (0,072 X 1800) / 8,333$✓
$= 15,576 < 56,31\ \Omega$✓
$= 8,639 + j12,96$

$R_E = 8,639\ \Omega$✓
$X_E = 12,96\ \Omega$✓ (6)

3.3.2 Reg = 15,576 × 8,333 × Cos(56,31 – 36,87) / 1800✓
= 0,068 p.u
= 6,8 %✓

OR

Reg = 8,333[(8,639 × 0,8) + (12,96 × Sin 36,87) / 1800
= 0,068 p.u
= 6,8 % (2)
[20]

QUESTION 4

4.1

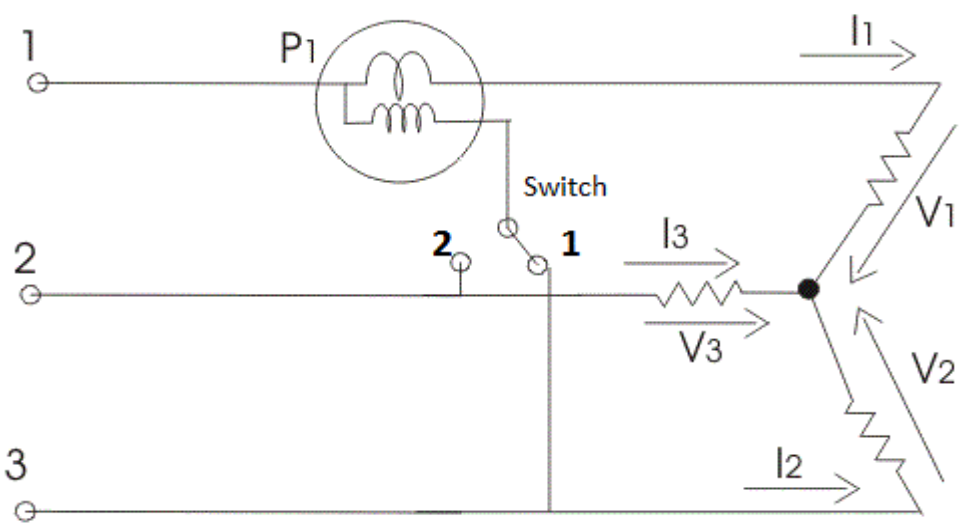

(1 mark for a wattmeter)
(1 mark for the appropriate [star connection] diagram)
(1 mark for any appropriate labelling shown) (3)

4.2 $P_{IN} = P_O / \eta = 28 \times 10^3 / 0,86 = 32,558$ kW✓

$W_2 + W_1 = 32558,139$✓ …….. (1)

$\Theta = \cos^{-1}(0,86) = 30,68$✓

$\tan 30,68 = \sqrt{3}(W_2 - W_1) / 32558,1395$✓
$\sqrt{3}(W_2 - W_1) = 19316,239$
$W_2 - W_1 = 19316,239 / \sqrt{3}$
$= 11152, 236$✓ ……. (2)

(2) + (1)
$2W_2 = 43710,375$✓
$W_2 = 43710,375 / 2$
$= 21,855$ kW✓ (7)

4.3 $I_L = S / V_L = 2,8 \times 10^3 / 33 = 84,849$ A ✓

IR = 84,849 × 3,6 = 305,455 < 0 = 305,455 + j0
IX = 84,849 × 7,5 = 636,368 < 90 = 0 + j636,368
V_P = 33000 < 30,68 = 28381,004 + j16838,01

$V_S = V_P < \Theta + IR < 0 + IX < 90$
= 28381,004 + j16838,01 + 305,455 + j0 + 0 + j636,368 ✓
= 28686,459 + j17474,378✓
= 33589,683 < 31,35 V✓

Reg = ($V_S – V_R$) / V_R = [(33589,683 – 33000) / 33000] × 100 ✓
= 1,787 % ✓ (6)

4.4 d = 20 mm
l = 100 km
d_1 = 1 m
r = $\frac{d}{2}$ =10 mm = 0.01 m ✓
$d_e = 1.26 \times d_1$ = 1.26 m ✓

C = $1/\{18 \times \ln(\frac{de}{r})\} \times l$
C = $1/\{18 \times \ln(\frac{1.26}{0.01})\} \times 100$ ✓
C = 1.15 µF ✓ (4)
[20]

QUESTION 5

5.1 Distribution factor is the ratio of the actual emf obtained to the emf that would be obtained if all coils were concentrated in one slot. (2)

5.2 The slip produces the current in the rotor and develops the torque. If there is no slip, no current will be induced and no torque developed. (2)

5.3 5.3.1 $F = N_S p / 60 = (1350 \times 2) / 60$✓
= 45 Hz✓ (2)

5.3.2 S/ph = 6 × 4 = 24 slots/ph ✓

Zph = 4 × 24 = 96 cond/ph ✓

Tph = 96 / 2 = 48 turns/ph ✓ (3)

5.3.3 $E_P = 380 / \sqrt{3} = 219,393$ V✓

$\phi = E_P / (2,22 K_d Z_P f)$
= 219,393 / (2,22 × 0,97 × 0,866 × 96 × 45)✓
= 0,0272 Wb
= 27,233 mWb✓ (3)

5.4 5.4.1 $N_S = 60\ f / p = (60 \times 50) / 3$✓ = 1000 r/min✓

$P_{IN} = 2\pi\ N_S\ T / 60 = (2\pi \times 1000 \times 140) / 60$✓
= 14660,766 W
= 14,661 kW✓ (4)

5.4.2 $S = (N_S - N_R) / N_S = (1000 - 900) / 1000$✓
= 0,1 p.u✓

$Rotor_{CU} = S \times Rotor_{IN} = 0,1 \times 14660,766$✓
= 1466,077 W ✓ (4)
[20]

TOTAL: 100

Copyright reserved