higher education & training

Department:
Higher Education and Training
REPUBLIC OF SOUTH AFRICA

NATIONAL CERTIFICATE

ELECTRICAL TRADE THEORY N3

(11041263)

2 August 2021 (X-paper)
09:00–12:00

Drawing instruments and nonprogrammable calculators may be used.

This question paper consists of 6 pages and 1 formula sheet.

130Q1G2102

Copyright reserved

DEPARTMENT OF HIGHER EDUCATION AND TRAINING
REPUBLIC OF SOUTH AFRICA

NATIONAL CERTIFICATE
ELECTRICAL TRADE THEORY N3
TIME: 3 HOURS
MARKS: 100

INSTRUCTIONS AND INFORMATION

1. Answer all the questions.
2. Read all the questions carefully.
3. Number the answers according to the numbering system used in this question paper.
4. Where applicable, answers must be in accordance with the SABS (SANS) Code of Practice SANS 10142-1:2003 for the Wiring of Premises.
5. Sketches must be neat, labelled and large enough to show the required detail.
6. Formulae used in Electrical Trade Theory N3 can be found at the end of the question paper.
7. Answers must be given to TWO decimal places.
8. Write neatly and legibly.

Copyright reserved

QUESTION 1: DOMESTIC APPLIANCES

1.1 State TWO main types of washing machines. (2)

1.2 As a maintenance electrician you are called out to replace the immersion element of a water heater as shown in the FIGURE below.

State EIGHT steps to be followed during the replacement of the element.

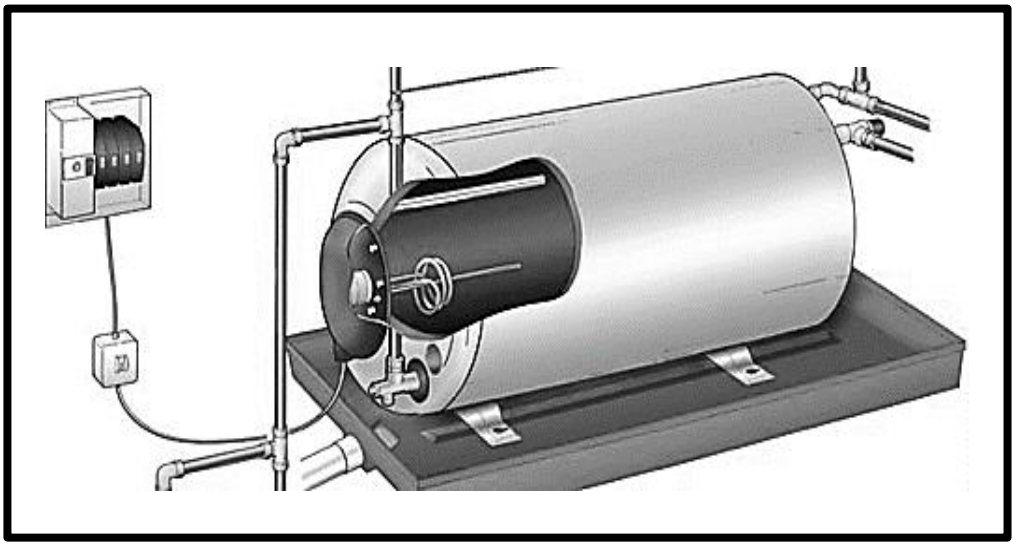

FIGURE: Water heater (8)

[10]

QUESTION 2: PROTECTION

2.1 Indicate whether the following statements are TRUE or FALSE by writing only 'True' or 'False' next to the question number (2.1.1–2.1.6) in the ANSWER BOOK.

2.1.1 Steel conduit pipes shall be earthed.

2.1.2 A hair dryer does not need to be earthed.

2.1.3 A refrigerator does not need to be earthed.

2.1.4 Hot-water and cold-water systems shall be bonded together and earthed.

2.1.5 Conductive parts of discharge light fittings shall be earthed.

2.1.6 Fixings such as cleats, clips, saddles and clamps shall be earthed.

(6 × 1) (6)

2.2 Briefly explain the difference between an earthing conductor and an earth electrode as applicable to electrical installations. (4)

[10]

Copyright reserved

QUESTION 3: ILLUMINATION

3.1 Draw a neat, labelled circuit diagram of a high-pressure mercury vapour discharge lamp. (6)

3.2 State TWO applications of each of the following lamps:

3.2.1 Sodium-vapour discharge lamps.

3.2.2 Cold-cathode neon lamps

(2 × 2) (4)

[10]

QUESTION 4: ALTERNATING CURRENT THEORY

4.1 A sine wave has a maximum value of 311 V and a time period of 20 ms.

4.1.1 Write down the equation that describes this waveform. (3)

4.1.2 Calculate the effective value of this waveform. (2)

4.2 A sine wave has an rms value of 240 V and a frequency of 50 Hz.

4.2.1 Write down the equation that describes this waveform. (3)

4.2.2 Calculate the average value of this waveform. (2)

[10]

QUESTION 5: SERIES RLC CIRCUITS

A 210 V, 50 Hz emf is applied to a series circuit consisting of a resistor of 12 Ω, an inductor of 0,12 H (henry) and a capacitor of 100 µF.

Calculate the following:

5.1 The impedance of the circuit (6)

5.2 The current following through the circuit (2)

5.3 The phase angle (2)

[10]

Copyright reserved

QUESTION 6: THREE-PHASE AC SYSTEMS

6.1 Draw a neat fully labelled sketch to show the waveforms of a three-phase supply. (3)

6.2 Draw a phasor diagram represent the waveforms drawn in QUESTION 6.1. (1)

6.3 The stator windings of a three-phase induction motor are connected in star. If this motor is connected to a 380 V supply, it draws a current of 4 A from the supply at a power factor of 0,89 lagging.

Calculate:

6.3.1 The voltage across each winding. (2)

6.3.2 The phase current of the motor. (1)

6.3.3 The input power to the motor in kW. (3)

[10]

QUESTION 7: TRANSFORMERS

7.1 How can you determine the turns ratio of a transformer if it is not possible to count the number of turns on the windings? (2)

7.2 A three-phase step-down transformer has a delta connected primary and star connected secondary. The primary line voltage is 6,6 kV and the secondary line voltage is 380 V.

Calculate:

7.2.1 The secondary phase voltage (2)

7.2.2 The transformation ratio (2)

7.2.3 The primary line current when the secondary line current is 500 A (4)

[10]

QUESTION 8: DC MACHINES

8.1 Name any TWO tests that are conducted on a DC machine. (2)

8.2 State TWO advantages that DC motors have over AC motors. (2)

8.3 Draw the load characteristics of compound wound motors clearly showing the speed against armature current. (5)

8.4 State ONE application of a series motor. (1)

[10]

Copyright reserved

QUESTION 9: AC MACHINES

9.1 State the purpose of the rotor of an induction motor. (2)

9.2 Determine the approximate speed of a four-pole induction motor that is connected to 380 V, 50 Hz supply. (2)

9.3 Draw a neat and fully labelled circuit diagram of a manual star-delta starter.

Your diagram must include both the power and auxiliary circuits. (6)

[10]

QUESTION 10: MEASURING INSTRUMENTS AND ELECTRONICS

10.1 Name two types of moving iron instruments. (2)

10.2 Draw a neat, labelled sketch of a full-wave rectifier using four diodes. (4)

10.3 Give the definition for each of the following terms:

10.3.1 Conventional current flow

10.3.2 Ion

(2 × 1) (2)

10.4 State TWO materials used in the manufacture of semiconductor devices. (2)

[10]

TOTAL: 100

Copyright reserved

(11041263)

ELECTRICAL TRADE THEORY N3

FORMULA SHEET

$I_T = \frac{V}{Z}$

$I_{ACTIVE} = I_T \cos \emptyset$

$I_{REACTIVE} = I_T \sin \emptyset$

$X_L = 2\pi f L$

$X_C = \frac{1}{2\pi f C}$

$Z = \sqrt{R^2 + (X_L - X_C)^2}$

$\emptyset = Cos^{-1}(\frac{R}{Z})$

$V_R = I_T R$

$V_{XL} = I_T X_L$

$V_{XC} = I_T X_C$

$V = \sqrt{V_R{}^2 + (V_{XL} - V_{XC})^2}$

$P = I^2 R$

$P = \sqrt{3}\ V_L\ I_L \cos \emptyset$

$S = VI$

$S = \sqrt{3}\ V_L\ I_L$

<u>DELTA</u>

$V_L = V_{PH/F}$

$I_L = \sqrt{3}\ I_{PH}$

<u>STAR</u>

$V_L = \sqrt{3}\ V_{PH}$

$I_L = I_{PH/F}$

$\frac{V_P}{V_S} = \frac{N_P}{N_S} = \frac{I_S}{I_P}$

$N = \frac{f \times 60}{P}$

$s = \frac{n - n_r}{n}$

$\omega = 2\pi f$

$i = I_m \sin \emptyset$

$I_{rms} = 0{,}707\ I_m$

$I_{ave} = 0{,}637\ I_m$

$I_{rms} = \sqrt{\frac{i1^2 + i2^2 + \cdots in^2}{n}}$

$I_{ave} = \frac{i_1 + i_2 + .. i_n}{n}$

$Form\ factor = \frac{RMS - Value}{AVE - Value}$

$Crest\ factor = \frac{MAX - Value}{RMS - Value}$

<u>SERIES</u>

$R_T = R_1 + R_2 + \cdots R_n$

<u>PARALLEL</u>

$\frac{1}{R_T} = \frac{1}{R_1} + \frac{1}{R_2} + \cdots \frac{1}{R_n}$

Copyright reserved