higher education & training

Department:
Higher Education and Training
REPUBLIC OF SOUTH AFRICA

MARKING GUIDELINE

NATIONAL CERTIFICATE

ELECTRICAL TRADE THEORY N3

02 August 2021

This marking guideline consists of 9 pages.

Copyright reserved

QUESTION 1

QUESTION 1: DOMESTIC APPLIANCES

1.1
- Centre agitator type
- Side spinner type
- Rotating drum type (Any 2 x 1) (2)

1.2
- Isolate the geyser from the supply.
- Close the cold-water supply to the geyser.
- Open one hot-water tap and drain the water through the drain's stopcock.
- Disconnect and remove the element.
- Replace with the new element and gasket.
- Open the cold-water supply let the geyser fill up, close the hot tap and check for leaks.
- Reconnect the element.
- Replace the cover plate.
- Restore the supply. (Any 8 × 1) (8)

[10]

QUESTION 2: PROTECTION

2.1
2.1.1 True
2.1.2 True
2.1.3 False
2.1.4 True
2.1.5 True
2.1.6 False

(6 × 1) (6)

2.2 Earthing conductor makes the final connection between the consumer's earth and an earth electrode or the suppliers' earth✓✓, whereas an earth electrode makes final electrical connection to the general mass of the earth. ✓✓ (4)

[10]

QUESTION 3: ILLUMINATION

3.1

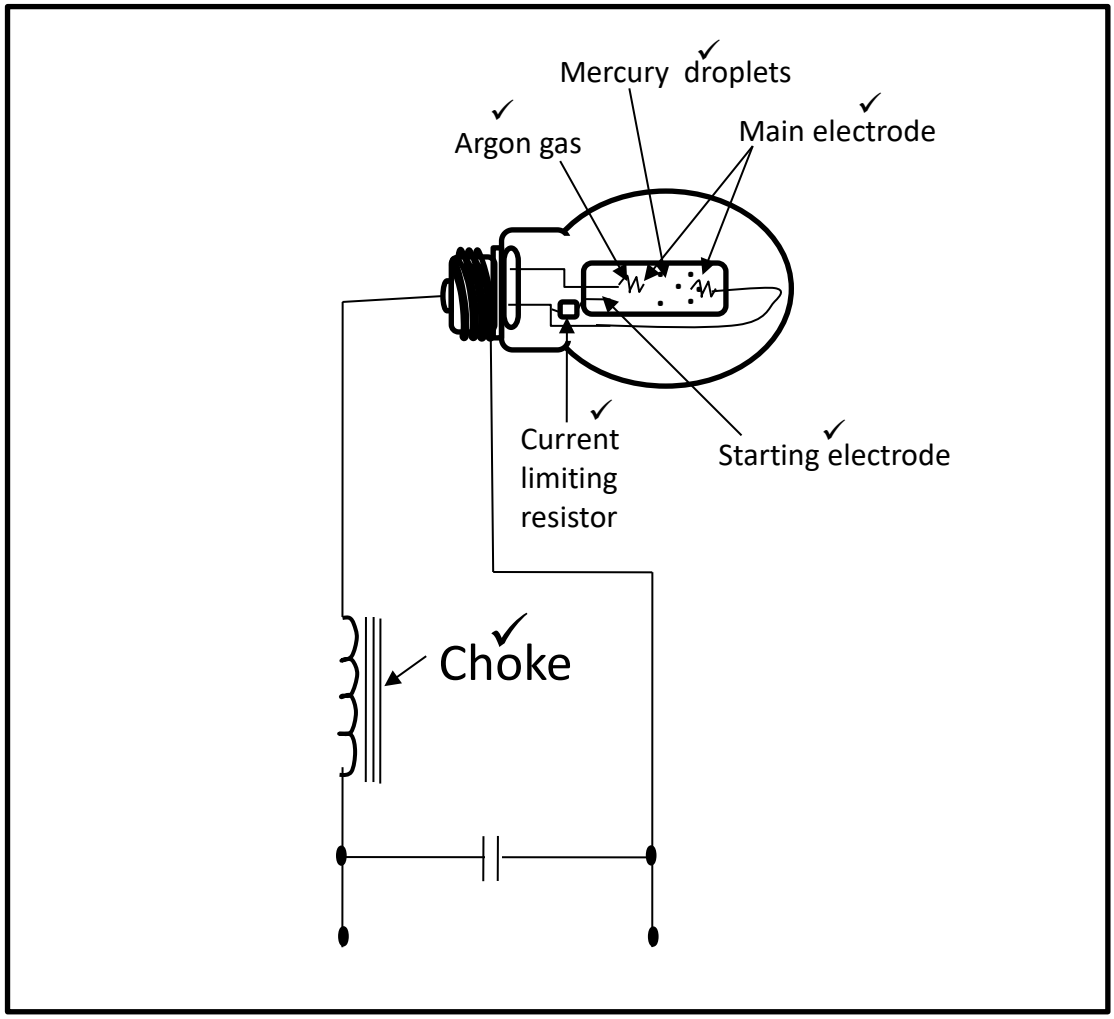

(6)

3.2 3.2.1

- Streetlighting
- Highways
- Airport runways (Any 2)

3.2.2

- Electrical appliances, such as stove, fridges and heaters
- Control panels where space is limited

(2 × 2) (4)

[10]

QUESTION 4: ALTERNATING CURRENT THEORY

4.1 4.1.1 $e = Em \sin 2\pi ft$ ✓ but $f = \frac{1}{T} = \frac{1}{0,02} = 50\ Hz$ ✓

$= 311 \sin 2\pi \times 50 \times t$

$= 311 \sin 314,2t$ ✓ (3)

4.1.2 $V_{rms} = 0,707 \times V_{max}$

$= 0,707 \times 311$✓

$= 219,88\ V$✓ (2)

4.2 4.2.1 $e = Em \sin 2\pi ft$ ✓ but $E_{rms} = 0,707\ Em$

$= 340 \sin 2\pi \times 50t$ $E_m = \frac{240}{0,707}$

$= 340 \sin 314,2t$✓ $= 339,4\ V\ or$

$= 340\ V$ ✓ (3)

4.2.2 $V_{ave} = 0,637 \times V_{max}$

$= 0,637 \times 340$✓

$= 216,58$ V✓ (2)

[10]

QUESTION 5: SERIES RLC CIRCUITS

5.1 $Z = \sqrt{R^2 + (X_L - X_c)}$ but $X_l = 2\pi FL$

$= \sqrt{12^2 + (37,69 - 31,83)^2}$ ✓ $= 2\pi \times 50 \times 0,12$✓

$= 13,35\ \Omega$ ✓ $= 37,69\ \Omega$ ✓

$X_C = \frac{1}{2\pi FT}$

$= \frac{1\ 000\ 000}{2\pi \times 50 \times 100}$ ✓

$= 31,83\ \Omega$✓ (6)

5.2 $I = \frac{V}{Z}$

$= \frac{210}{13,35}$ ✓

$= 15,73\ A$✓ (2)

5.3 $\theta = \cos^{-1}\frac{R}{Z}$ OR $\theta = \tan^{-1}\frac{(X_L - X_c)}{R}$

$= \cos^{-1}\frac{12}{13,35}$

$= \cos^{-1} 0,899$ ✓ $= \tan^{-1}\frac{(37,69-31,83)}{12}$

$=25,99°$✓ $= 26,028°$ (2)

[10]

QUESTION 6: THREE PHASE AC SYSTEM

6.1

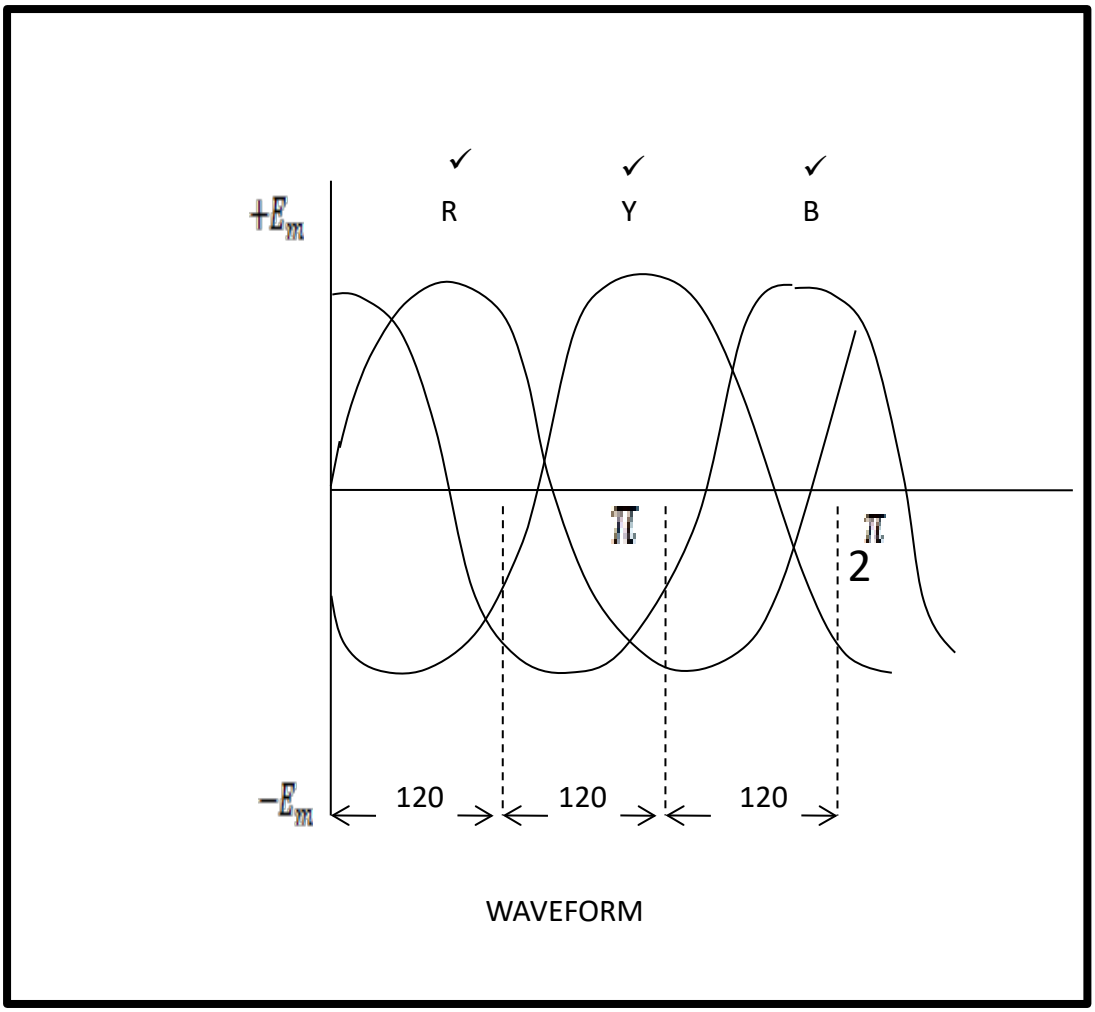

WAVEFORM

(3)

6.2

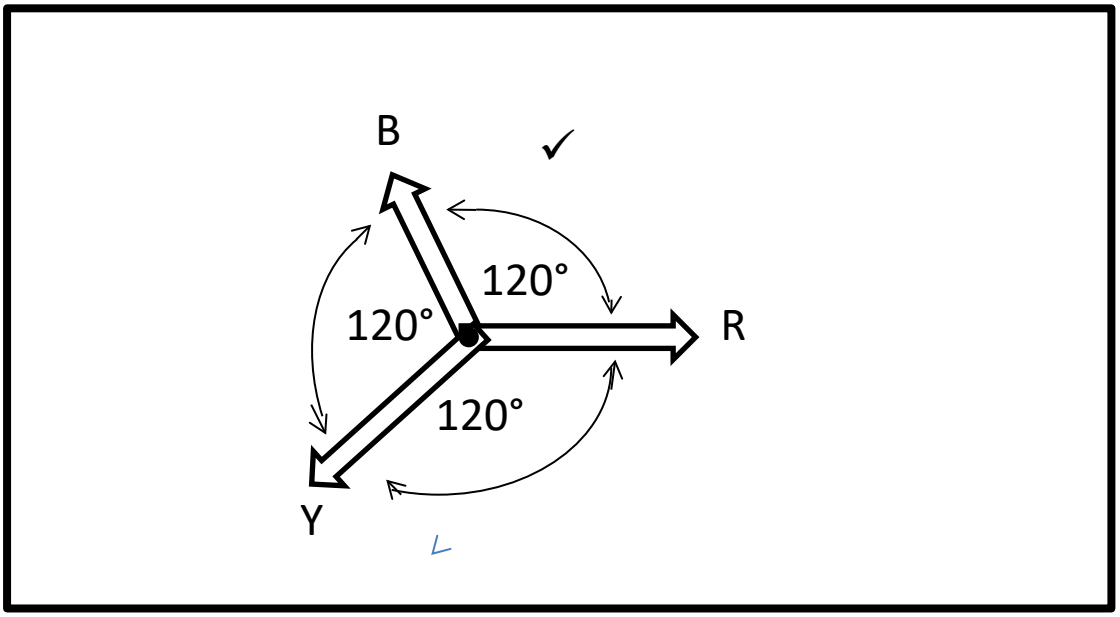

(1)

6.3 6.3.1 $V_L = \sqrt{3}\, V_{ph}$
$V_{ph} = \frac{380}{\sqrt{3}}$ ✓
$= 219{,}5\ V$ ✓ (2)

6.3.2 $I_{ph} = I_L = 4\ A\ V$ ✓ (1)

6.3.3 $P = \sqrt{3}\, V_L I_L \cos\theta$
$= \sqrt{3} \times 380 \times 4 \times 0{,}89$ ✓
$= 2343\ W$ ✓
$= 2{,}343\ KW$ ✓

OR $P = 3\, V_{ph} I_{ph} \cos\theta$
$= 3 \times 219{,}5 \times 4 \times 0{,}89$
$= 2344\ W$
$= 2{,}344\ KW$ (3)
[10]

QUESTION 7: TRANSFORMERS

7.1 Disconnect the load and measure the input and output voltage, ✓ then
$\frac{N_1}{N_2} = \frac{V_1}{V_2}$ ✓ (2)

7.2 7.2.1 $V_{L2} = \sqrt{3}\, V_{ph2}$
$V_{ph2} = \frac{V_{L2}}{\sqrt{3}}$
$V_{ph2} = \frac{380}{\sqrt{3}}$ ✓
$= 219{,}393\ V$ ✓ (2)

7.2.2 $\frac{N_1}{N_2} = \frac{V_1}{V_2}$
$\frac{N_1}{N_2} = \frac{6\,600}{219{,}393}$ ✓
$= 30{,}08 : 1$ ✓ (2)

7.2.3 $\frac{I_1}{I_2} = \frac{V_2}{V_1}$
$= \frac{219{,}393}{6600} \times 500$ ✓
$= 16{,}62\ A$ ✓
$but\ in\ delta\ I_{LI} = \sqrt{3}\, I_{Ph1}$
$= \sqrt{3} \times 16{,}62$ ✓
$= 28{,}79\ A$ ✓ (4)
[10]

QUESTION 8: DC MACHINES

8.1
- Continuity test with a multimeter.
- Insulation-resistance test with a megger.
- The grower test for short circuit with a multimeter. (Any 2 × 1) (2)

8.2
- Speed control over a wide range is easier and cheaper to obtain.
- They can be operated directly from storage batteries. (2)

8.3

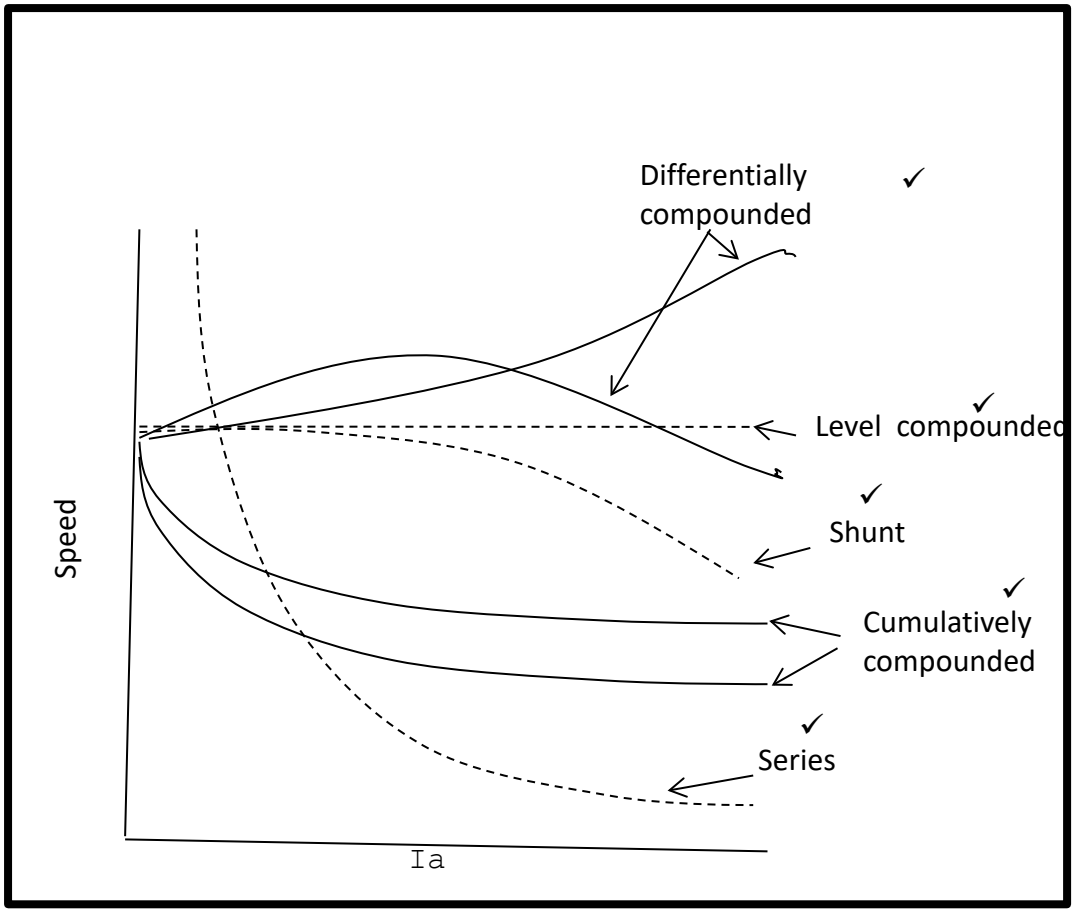

(5)

8.4
- Starting motor vehicle engines
- Driving cranes
- Driving trains
- Driving hoists
- Driving lifts
- Driving trolley buses (Any 1 × 1) (1)

[10]

QUESTION 9: AC MACHINES

9.1 The rotor provides the turning motion after interacting with the stator field, thus enabling the motor to function. (2)

9.2 $f = \frac{NP}{60}$

$N = \frac{50 \times 60}{2}$ ✓

$N = 1\,500\ r.p.m.$ ✓ (2)

9.3

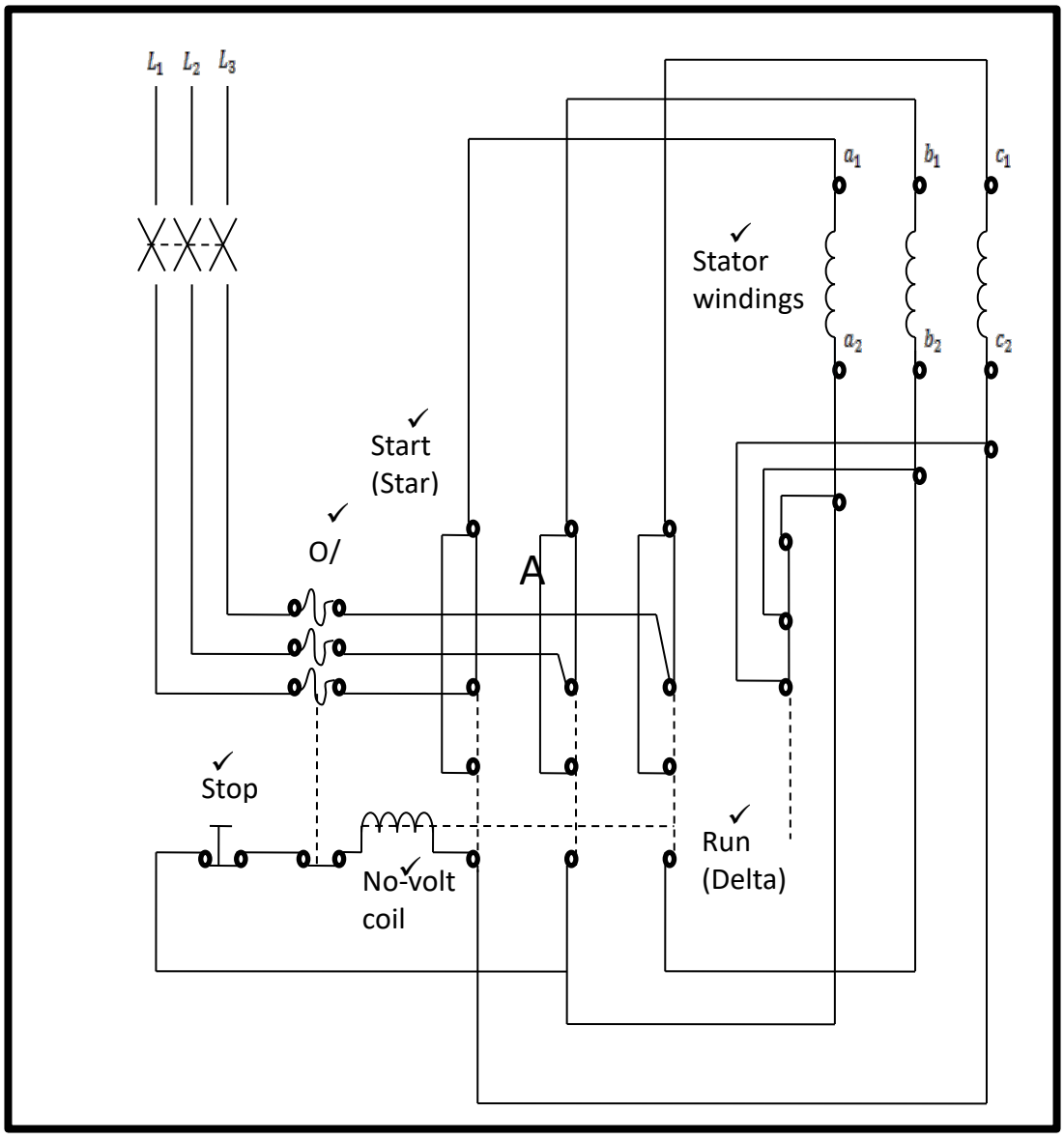

(6)
[10]

QUESTION 10: MEASURING INSTRUMENTS ADN ELECTRONICS

10.1
- Attraction type
- Repulsion type (2)

10.2

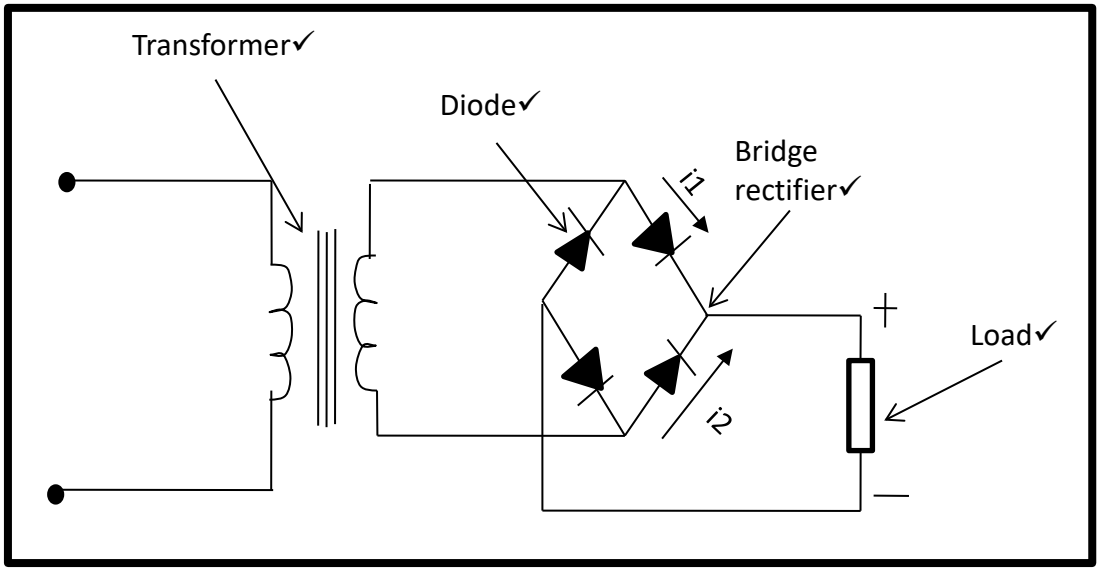

(4)

10.3 10.3.1 Current flows from positive terminal to a negative terminal.

10.3.2 When an atom gains or losses one or more electrons.

(2 × 1) (2)

10.4 Germanium✓ and silicon✓ (2)

[10]

TOTAL: 100

Copyright reserved