higher education & training

Department:
Higher Education and Training
REPUBLIC OF SOUTH AFRICA

MARKING GUIDELINE

NATIONAL CERTIFICATE

ELECTRICAL TRADE THEORY N3

12 April 2021

This marking guideline consists of 7 pages.

Copyright reserved

QUESTION 1: DOMESTIC APPLIANCES

1.1 1.1.1 When current flows through the circuit, heat is created and causes the bimetal strip to bend. ✓ The cam will increase the distance and the bimetal strip must move to open the contacts. ✓ (2)

1.1.2
- Insulation fault between the element and casing of the iron
- Insulation fault in the flexible cord from the plug to the iron
- Internal insulation fault between the earth and current-carrying parts in the switching circuit of the iron (Any 2 × 2) (4)

1.1.3 Bimetal strip thermostat (1)

1.2

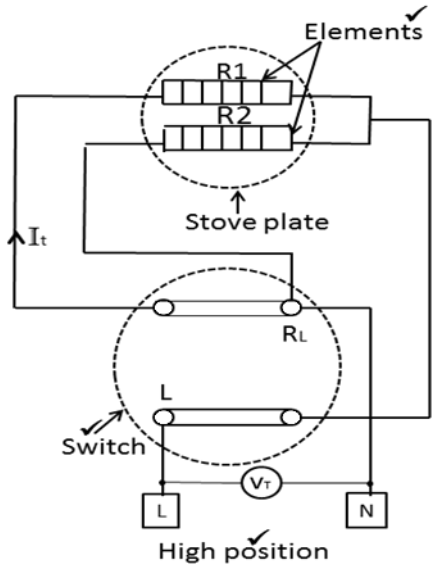

(3)
[10]

QUESTION 2: PROTECTION

2.1 2.1.1 Must not be earthed
2.1.2 Must not be earthed
2.1.3 Must be earthed
2.1.4 Bonded and earthed
2.1.5 Must not be earthed
(5 × 1) (5)

2.2 2.2.1 Coil and armature alone (2)

2.2.2 Time lag is obtained by means of a dash pot fitted to the oil circuit breaker controlling the stator circuits. The time lag consists of:
- Body casting with a small hole for oil to move through
- Moveable plunger
- Oil-returning cup (3)

[10]

QUESTION 3: ILLUMINATION

3.1 3.1.1 A: High-pressure mercury-vapour discharge lamp
B: Sodium-vapour discharge lamp (2)

3.1.2 A: Street lighting✓, floodlighting✓, lighting of industrial premises
B: Street lighting✓, highways✓, airport runways (4)

3.1.3 Colours are not distinguishable under its yellow light. (1)

3.2

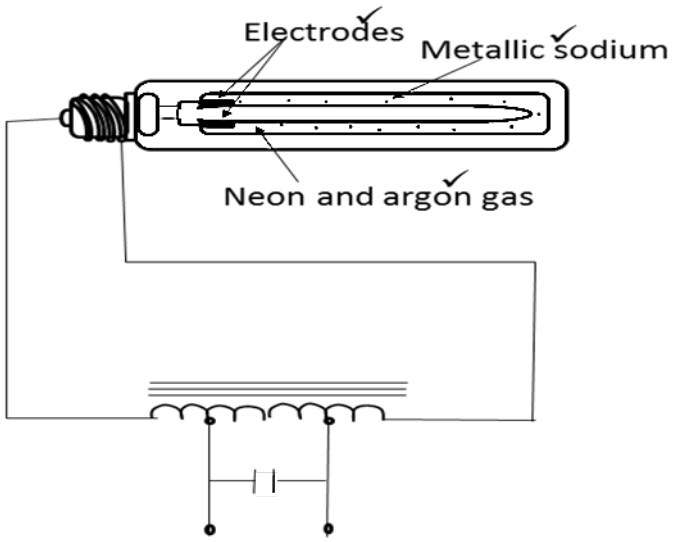

(3)
[10]

QUESTION 4: ALTERNATING CURRENT THEORY

4.1 E_{max} = 250 V (1)

4.2 $\omega = 2\pi f$

$f = \frac{\omega}{2\pi}$✓

$= \frac{314}{2\pi}$✓

$=$ 49,97 Hz or 50 Hz✓ (3)

4.3 E_{rms} = $0{,}707E_{max}$
= $0{,}707 \times 250$ ✓
= 176,75 V ✓ (2)

4.4 $t = \frac{1}{f}$
$= \frac{1}{50}$
= 0,02 s✓ (1)

4.5 $e = 250 \sin \omega t$
$= 250 \sin (314 \times 0{,}008 \times 57{,}3°)$✓
$= 250 \times 0{,}589$✓
$= 147{,}25$ V✓ (3)
[10]

QUESTION 5: SERIES RLC CIRCUITS

5.1 5.1.1 $C = \frac{1}{(2\pi f)^2 L}$
$= \frac{1}{(2\pi \times 50)^2 \times 100 \times 10^{-3}}$ ✓
$= 101{,}32$ µF ✓ (2)

5.1.2 $I = \frac{V}{Z}$
$= \frac{150}{15}$ ✓
$= 10$ A ✓ (2)

5.1.3 $V_L = I \times 2\pi f L$
$= 10 \times 2\pi \times 50 \times 100 \times 10^{-3}$ ✓
$= 314{,}16$ V ✓ (2)

5.1.4 $V_C = V_L$ (during resonance)
$= 314{,}16$ V ✓ (1)

5.1.5 $V_R = I \times R$
$= 10 \times 15$
$= 150$ V ✓ (1)

5.2 $V_s = \sqrt{V_R{}^2 + (V_L - V_C)^2}$

$V_s = \sqrt{150^2 + (0)^2}$ ✓

$V_s = 150\ V$ ✓ (2)
[10]

QUESTION 6: THREE-PHASE AC SYSTEMS

6.1 6.1.1 False
6.1.2 True
6.1.3 True
6.1.4 True
6.1.5 True

(5 × 1) (5)

6.2 6.2.1 $V_{ph} = \frac{VL}{\sqrt{3}}$

$= \frac{400}{\sqrt{3}}$ ✓

$= 230{,}94$ V ✓ (2)

6.2.2 $I_{ph} = \frac{V_{ph}}{R}$

$= \frac{230{,}94}{12}$ ✓

$= 19{,}25$ A ✓ (2)

6.2.3 $I_L = I_{ph} = 19{,}25$ A✓ (1)

[10]

QUESTION 7: TRANSFORMERS

7.1 7.1.1 Transferred magnetically

7.1.2 Alternating voltage. (2 × 1) (2)

7.2 7.2.1 $\frac{Vph_1}{Vph_2}$ but $Vph_2 = \frac{VL_2}{\sqrt{3}}$

$= \frac{11\,000}{230{,}94}$ ✓ $= \frac{400}{\sqrt{3}}$

$= 47{,}63$ $= 230{,}94$ V ✓

T.R = 47,63 : 1 ✓ (3)

7.2.2 $S = \sqrt{3}\, V_{L2} I_{L2}$

$I_{L2} = \frac{S}{\sqrt{3}\, V_{L2}}$ **OR** $S = 3 \times V_{ph} I_{ph}$

$I_{L2} = \frac{30\,000}{\sqrt{3} \times 400}$ ✓ $\text{Iph} = \frac{S}{3 \times Vph}$

$= 43{,}3$ A✓ $= \frac{30\,000}{3 \times 230{,}94}$

$Iph_2 = I_{L2}$ (star connections) $= 43{,}3$ A

$I_{L2} = Iph_2 = 43{,}3$ A✓ (3)

7.2.3 $I_{L1} = \frac{S}{\sqrt{3}\,V_{L1}}$

$= \frac{30\,000}{\sqrt{3}\times 11\,000}$ ✓

$= 1{,}57\ \text{A}$ ✓ (2)

[10]

QUESTION 8: DC MACHINES

8.1
- Overload relay
- No-volt release coil
- Series resistors (Any 2 × 1) (2)

8.2 Armature reaction refers to the distortion of the main flux set up by the armature conductors when they carry current. (2)

8.3

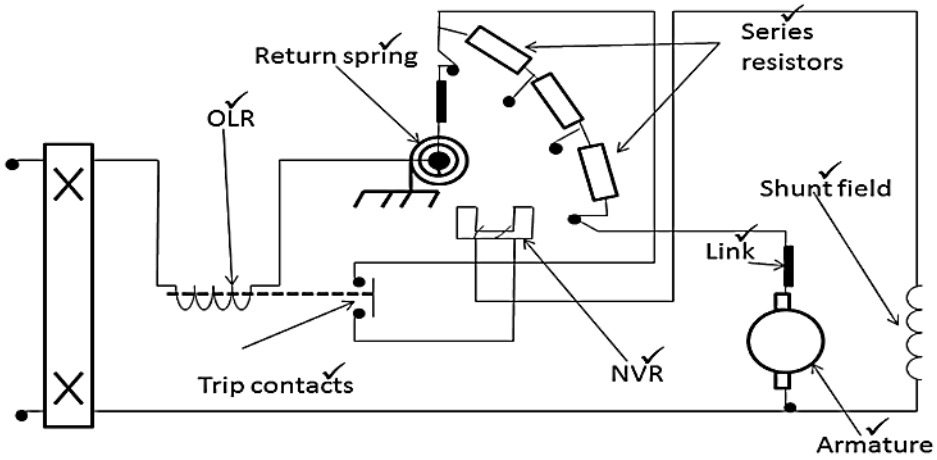

(6)

[10]

QUESTION 9: AC MACHINES

9.1 9.1.1 Wound-rotor motors
9.1.2 Squirrel-cage motors

(2 × 1) (2)

9.2 By reversing the connections of any two of the supply lines to the stator (2)

9.3

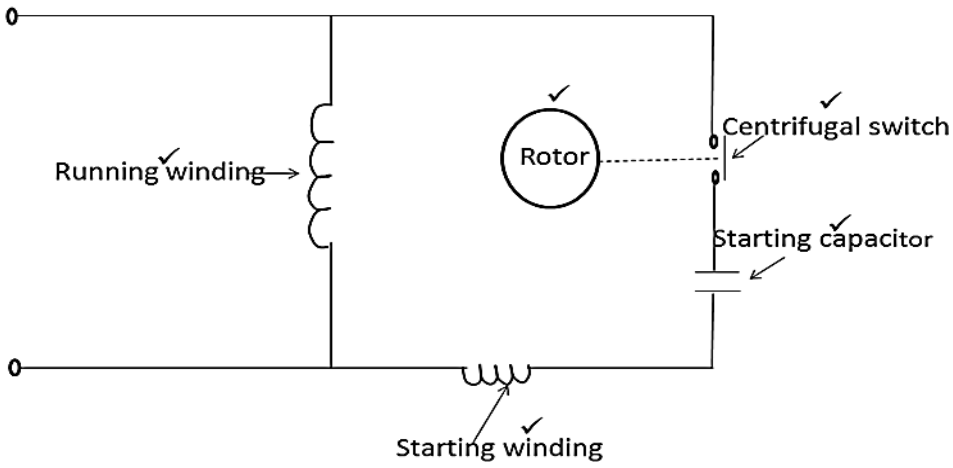

(4)

9.4 A centrifugal switch is used to disconnect the starting winding from the supply as the motor approaches full speed. (2)

[10]

QUESTION 10: MEASURING INSTRUMENTS AND ELECTRONICS

10.1

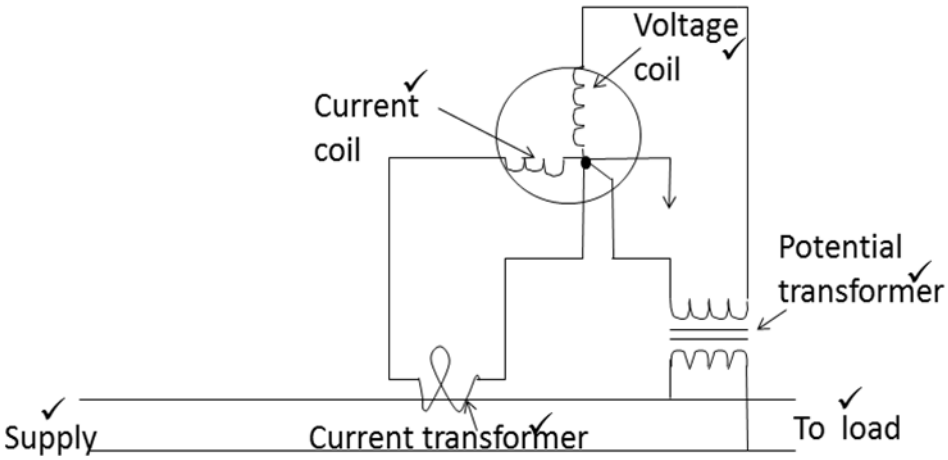

(5)

10.2
- Germanium
- Silicon

(Any 1 × 1) (1)

10.3 10.3.1 Common emitter (1)

10.3.2 A: Base
B: Emitter
C: Collector

(3 × 1) (3)

[10]

TOTAL: 100

Copyright reserved