higher education & training

Department:
Higher Education and Training
REPUBLIC OF SOUTH AFRICA

MARKING GUIDELINE

NATIONAL CERTIFICATE

ELECTRICAL TRADE THEORY N3

7 April 2020

This marking guideline consists of 8 pages.

Copyright reserved

QUESTION 1: DOMESTIC APPLIANCES

1.1. 1.1.1 Oven
1.1.2 Bellows
1.1.3 Temperature adjusting cam
1.1.4 Element
1.1.5 Pivot light
1.1.6 Control knob

(6 × 1) (6)

1.2 When the temperature is set to the desired value, both top and bottom elements are switched on.✓ As the oven heats up, the liquid in the tube expands.✓ This causes the bellows to expand which in turn operates the microswitches. A few degrees before the oven reaches the preset temperature, the top element is switched off.✓ As the oven cools, the bellows contracts and the bottom element is switched off. ✓ (4 × 1) (4)

[10]

QUESTION 2: PROTECTION

2.1 Both the live✓ and the neutral ✓ conductors of a single- phase system (2)

2.2

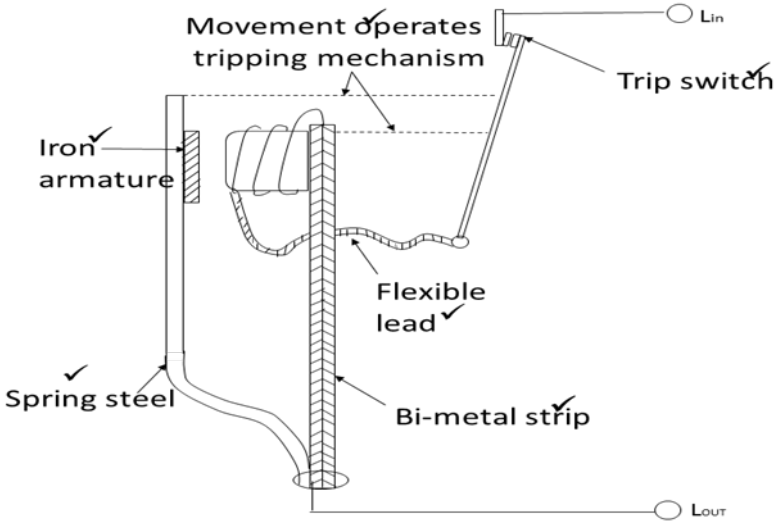

(Any 4 ×1) (4)

2.3
- The wiring diameter is rated differently for lighting, plug and other sub-circuits.
- The wiring code stipulations determine the rating of the breakers used for the different subcircuits.
- The maximum current drawn by the appliances in subcircuits is different and requires different levels of operation. (Any 2 × 2) (4)

[10]

QUESTION 3: ILLUMINATION

3.1 3.1.1 B
3.1.2 C
3.1.3 A
3.1.4 A

(4 × 1) (4)

3.2 3.2.1 Fluorescent lamp (1)

3.2.2 It supplies the high voltage surge required for starting.✓ After starting, it limits the current through the lamp to normal operating value.✓ (2)

3.2.3 When the supply is connected nearly all of the supply voltage appears across the primary.✓ The current in the secondary heats up the cathodes.✓ The tube strikes and voltage across the auto-transformer falls.✓ (3)

[10]

QUESTION 4: ALTERNATING CURRENT THEORY

4.1 $E_{rms} = 0{,}707 \times E_{max}$
$= 0{,}707 \times 31$✓
$= 220\ V$✓

$E_{ave} = 0{,}637 \times E_{max}$
$= 0{,}637 \times 311$✓
$= 198\ V$✓ (4)

4.2 $E_{max} = 311\ V$ (given)✓ (1)

4.3 $e = E_{max} \sin 2\pi ft$
$168 = 311 \sin(2\pi \times 50t \times 57{,}3)°$✓
$\sin(2\pi \times 50t \times 57{,}3)° = \frac{168}{311}$✓
$t = \frac{\sin^{-1} 0{,}54}{314{,}2 \times 57{,}3}$✓
$= 1{,}82\ milliseconds$✓ (3)

4.4 $e = E_{max} \sin 2\pi ft$
$311 = 311 \sin(2\pi \times 50t \times 57{,}3)°$✓
$\sin(2\pi \times 50t \times 57{,}3)° = \frac{311}{311}$
$t = \frac{\sin^{-1} 1}{314{,}2 \times 57{,}3}$
$= 5\ milliseconds$✓ (2)

[10]

QUESTION 5: SERIES RLC CIRCUITS

5.1 $I_R = \frac{V_R}{R}$

$= \frac{16}{8}$✓

$= 2A$✓ (2)

5.2 $X_c = \frac{1}{2\pi ft}$

$X_c = \frac{1000\ 000}{2\pi \times 50 \times 53{,}05}$✓

$= 60\ \Omega$ ✓ (2)

5.3 $V_C = I \times X_C$
$= 2 \times 60$✓
$= 120\ V$✓ (2)

5.4 $\tan\theta = \frac{V_L - V_C}{V_R}$
$\tan 20{,}56° = \frac{V_L - 120}{16}$
$V_L - 120 = 16 \times 0{,}375$✓
$V_L = 6 + 120$
$= 126\ V$✓

$X_L = \frac{V_L}{I}$

$X_L = \frac{126}{2}$✓
$= 63\ \Omega$✓

Alternative approach:

$Z_T = \frac{V_T}{I_T}$

$= \frac{17{,}09}{2}$
$= 8,545\ \Omega$

$Z_T = \sqrt{R^2 + (X_L - X_C)^2}$
$8{,}545 = \sqrt{8^2 + (X_L - 6)^2}$
$(X_L - 60)^2 = (8{,}545)^2 - 8^2$

$X_L = \sqrt{9{,}017} + 60$

$= 63{,}003\ \Omega$ (4)
[10]

QUESTION 6: THREE-PHASE AC SYSTEMS

6.1 6.1.1 $V_L = V_{ph} = 415$ ✓ (1)

6.1.2 $I_L = \sqrt{3}\, I_{ph}$

$I_{ph} = \frac{I_L}{\sqrt{3}}$✓

$= \frac{10}{\sqrt{3}}$✓

$= 5{,}77A$✓ (3)

6.1.3 $S = \sqrt{3}\, V_L I_L$

$= \sqrt{3} \times 415 \times 10$✓

$= 7188\ VA\ or\ 7{,}188\ KVA$✓

or

$S = 3\, V_{ph} I_{ph}$

$= 3 \times 415 \times 5{,}77$✓

$= 7188\ VA\ or\ 7{,}188\ KVA$✓ (2)

6.2

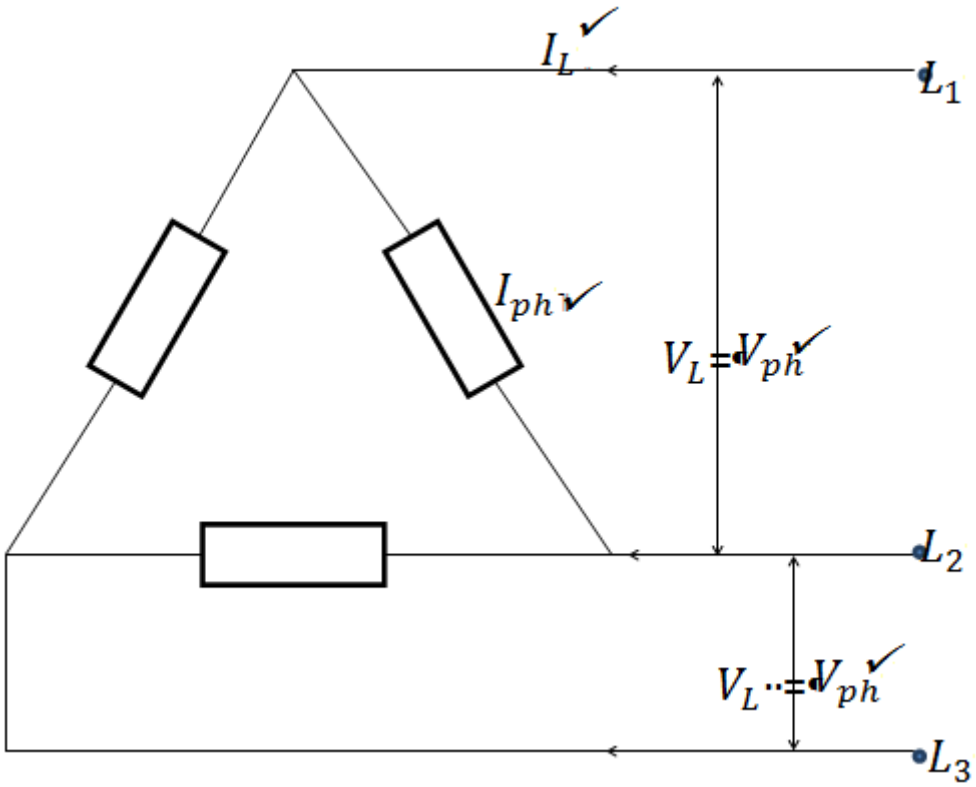

(4)
[10]

QUESTION 7: TRANSFORMERS

7.1 7.1.1

$$\frac{Vph_1}{Vph_2} = \frac{N_1}{N_2}$$
$$= \frac{10}{1} \times 2{,}2\checkmark$$
$$= 22\ KV\checkmark$$

$$VL_1 = \sqrt{3}\ Vph_1$$
$$= \sqrt{3} \times 22\ 000\checkmark$$
$$= 38{,}1\ KV\checkmark$$

(4)

7.1.2

$$S = \sqrt{3}\ VL_1 IL_1$$
$$I_{L1} = \frac{750\ 000}{\sqrt{3} \times 38\ 100}\ \checkmark$$
$$= 11{,}37A\checkmark$$

(2)

7.1.3

$$P = \sqrt{3}\ V_L I_{L1}\ \cos\theta$$
$$= 750\ 000 \times 0{,}8\checkmark$$
$$= 600\ KW\checkmark$$

(2)

7.2 To reduce the currents and voltages to safe practical values. ✓✓ (2)

[10]

QUESTION 8: DC MACHINES

8.1
- Shunt
- Series
- Combination of shunt and series (Any 2 × 1) (2)

8.2 8.2.1 No-volt release coil cuts supply to motor when supply voltage is too low

8.2.2 Series resistor limits the starting current to a safe value

8.2.3 Overload relay cuts supply to motor when current is too high (3 × 1) (3)

8.3 When a straight piece of copper wire has a current flowing through it and magnetic field flux lines cut the wire at 90°,✓ a force is experienced by the wire in a direction of 90° to both current and flux.✓ (2)

OR

The field current produces the main magnetic flux and the armature current produces the secondary magnetic field. These two magnetic fields interact with each other, setting the armature into motion.

8.4 8.4.1 True

8.4.2 False

8.4.3 True (3 × 1) (3)

[10]

QUESTION 9: AC MACHINES

9.1 9.1.1 D
9.1.2 B
9.1.3 E
9.1.4 A
9.1.5 C

(5 × 1) (5)

9.2

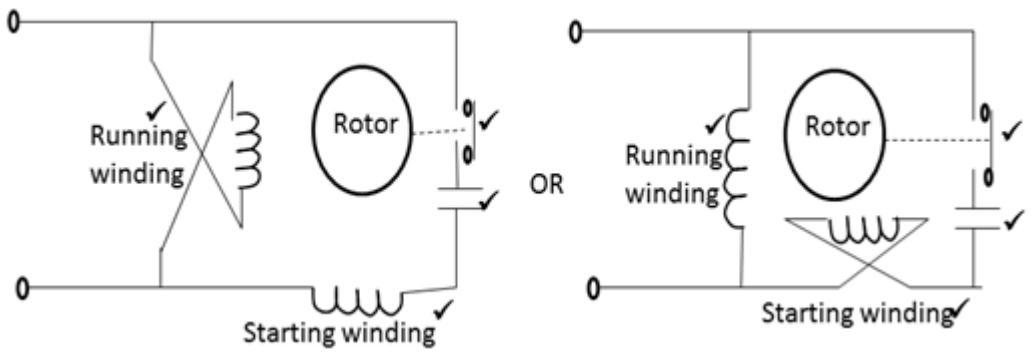

(Any 3 × 1) (3)

9.3
- To allow motor to start at a decreased supply current.
- Must disconnect all the phases.
- Must disconnect the supply if voltage is too low.
- Must have enough time delay to allow the motor to speed up. (Any 2 × 1) (2)

[10]

QUESTION 10: MEASURING INSTRUMENTS AND ELECTRONICS

10.1 10.1.1 Surface where P-type and N-type material come together.

10.1.2 Lacks holes and free electrons OR area where ions have been formed

(2 × 1) (2)

10.2

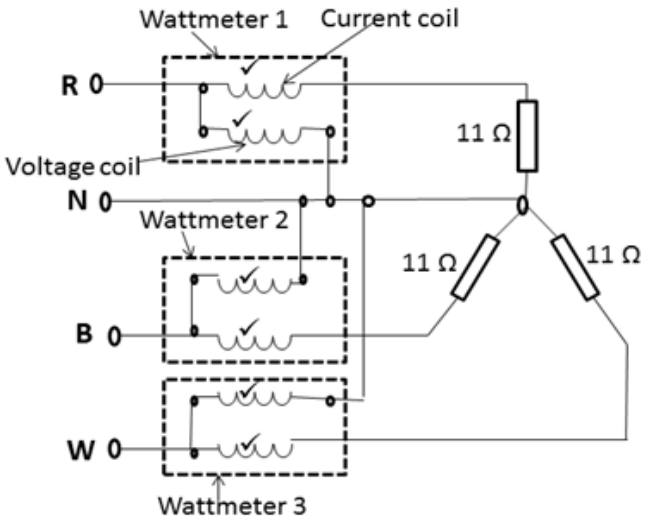

(6)

Copyright reserved

10.3 10.3.1 By connecting suitable resistor of high value in series with voltmeter or using a multiplier resistor.

10.3.2 By connecting suitable resistor in parallel with ammeter or using a shunt resistor.

(2 × 1) (2)
[10]

TOTAL: 100

Copyright reserved