higher education & training

Department:
Higher Education and Training
REPUBLIC OF SOUTH AFRICA

T520**(E)**(A4)T

NATIONAL CERTIFICATE

ELECTRICAL TRADE THEORY N3

(11041263)

4 April 2019 (X-Paper)
09:00–12:00

This question paper consists of 9 pages and 1 formula sheet.

Copyright reserved

DEPARTMENT OF HIGHER EDUCATION AND TRAINING
REPUBLIC OF SOUTH AFRICA

NATIONAL CERTIFICATE
ELECTRICAL TRADE THEORY N3
TIME: 3 HOURS
MARKS: 100

INSTRUCTIONS AND INFORMATION

1. Answer ALL the questions.
2. Read ALL the questions carefully.
3. Number the answers according to the numbering system used in this question paper.
4. Where applicable, answers must be in accordance with the SABS (SANS) Code of Practice SANS 10142-1:2003 for the Wiring of Premises.
5. Sketches must be neat, labelled and large enough to show the required detail.
6. Answers must be given to TWO decimal places.
7. Write neatly and legibly.

Copyright reserved

QUESTION 1: DOMESTIC APPLIANCES

1.1 Briefly explain how the construction of a convection heater allows air to be heated. (2)

1.2 Name the type of thermostat that is found in the following:

1.2.1 A laundry iron

1.2.2 A fridge or freezer

1.2.3 An electric iron

(3 × 1) (3)

1.3 Draw a neat, labelled circuit diagram to show how the elements of a stove plate are connected to a three-heat switch. Only indicate the medium position in the circuit. (5)

[10]

QUESTION 2: PROTECTION

Indicate whether the following statements are TRUE or FALSE. Choose the answer and write only 'True' or 'False' next to the question number (2.1–2.5) in the ANSWER BOOK.

2.1 The aim of bonding is to bring all the bonded parts to the same electrical potential.

2.2 If metallic baths and basins are electrically isolated from earth, they need not be earthed.

2.3 An earthing conductor is that conductor which makes the final connection between the consumer's earth terminal and an earth electrode.

2.4 The overcurrent rating of a fuse refers to the maximum current that the fuse will allow to flow before operating (blowing).

2.5 An earth-leakage relay must disconnect only the live conductor of a single-phase system.

(5 × 2) **[10]**

Copyright reserved

QUESTION 3: ILLUMINATION

3.1 State TWO advantages of a sodium-vapour discharge lamp. (2)

3.2 FIGURE 1 shows a circuit diagram of a fluorescent lamp that is started with the aid of an autotransformer.

Identify the parts indicated by writing only the answers next to the question numbers (3.2.1–3.2.5) in the ANSWER BOOK.

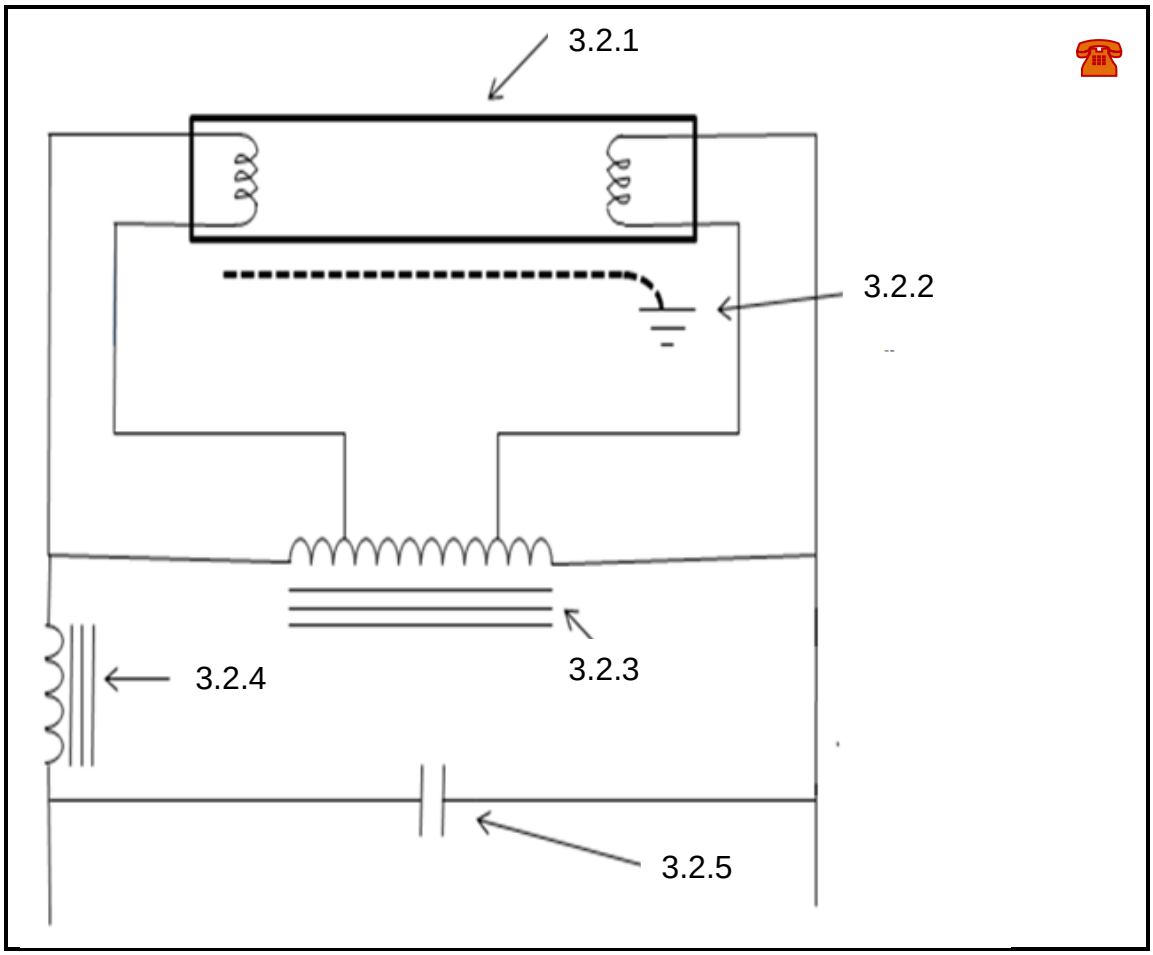

FIGURE 1 (5 × 1) (5)

3.3 State THREE methods that can be used to limit the stroboscopic effect. (3)

[10]

QUESTION 4: ALTERNATING-CURRENT THEORY

4.1 Write the equation of a waveform that will represent the following:

4.1.1 A sine wave with a maximum value of 310 V and a period of 20 m/s

4.1.2 A sine wave with an RMS value of 240 V and a frequency of 50 Hz

(2 × 3) (6)

4.2 Calculate the effective and average values of the sine wave/equation mentioned in QUESTION 4.1.1. (4)

[10]

QUESTION 5: SERIES RLC CIRCUIT

An alternating current circuit has a resistance of 5 ohms, an inductor of 0,02 H and a capacitor of 100 μf. The supply is 220 V at a frequency of 50 Hz.

5.1 Calculate:

5.1.1 The inductive reactance

5.1.2 The capacitive reactance

5.1.3 The circuit impedance

5.1.4 The power factor

(4 × 2) (8)

5.2 State whether the power factor mentioned in QUESTION 5.1.4 is leading or lagging and give a reason for your answer. (2)

[10]

Copyright reserved

QUESTION 6: THREE-PHASE AC SYSTEMS

6.1 Choose an item from COLUMN B that matches a description in COLUMN A. Write only the letter (A–D) next to the question number (6.1.1–6.1.4) in the ANSWER BOOK.

COLUMN A		COLUMN B	
6.1.1	The angle between the phase windings in a three-phase alternator is …	A	$\sqrt{3}$ times the phase voltage
6.1.2	Single-phase loads can be connected to a three-phase distribution that is …	B	381,05 V
6.1.3	The line voltage of a star-connected system is …	C	120°
6.1.4	If the phase voltage of the three-phase star-connected system is 220 V, then the line voltage is …	D	a four-wire star-connected system

(4 × 1) (4)

6.2 A three-phase star-connected motor draws a current of 30 amperes at a full load from a 415 V supply at a power factor of 0,85.

Calculate:

6.2.1 The voltage across each phase winding (3)

6.2.2 The current flowing in each phase winding (1)

6.2.3 The power input to the motor (2)

[10]

QUESTION 7: TRANSFORMERS

7.1 Explain the operation of a transformer under the following headings:

7.1.1 Number of turns

7.1.2 Type of supply used with this device

7.1.3 Mutual inductance

(3 × 1) (3)

Copyright reserved

7.2 The three single-phase transformers in FIGURE 2 have a primary line voltage of 132 kV and a secondary line voltage of 11 kV.

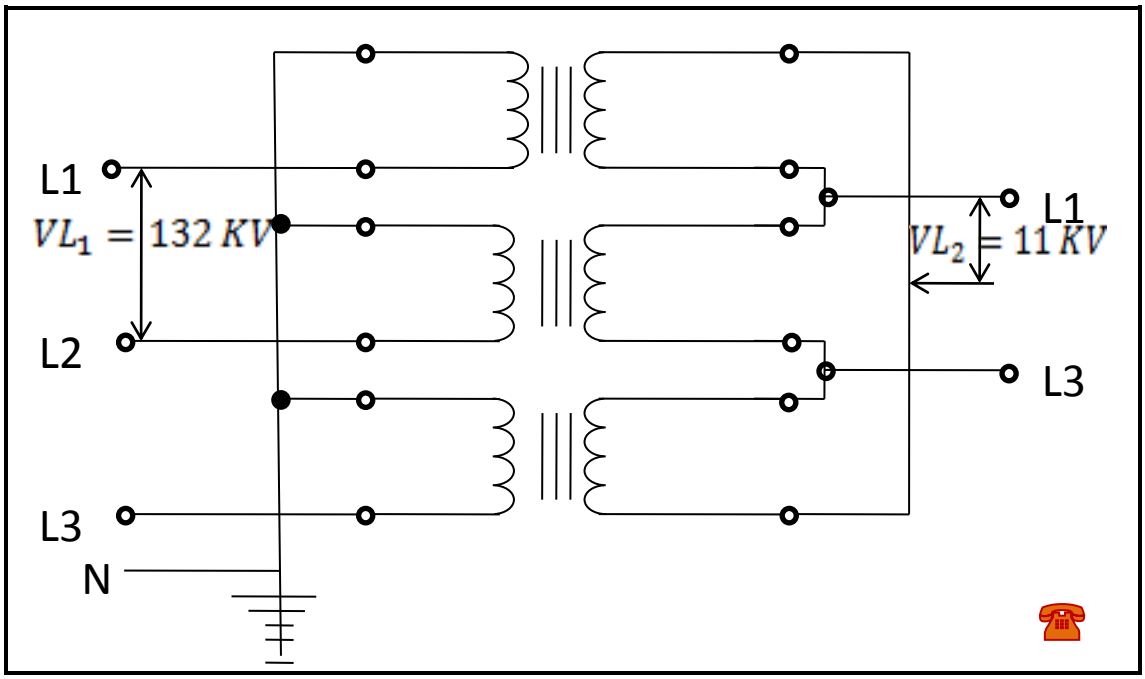

FIGURE 2

Ignore losses and calculate the following:

7.2.1 The magnitude of the primary phase voltage (Show all the manipulations of the formulae.) (3)

7.2.2 The turns ratio (2)

7.2.3 The transformer rating in kVA if the secondary line voltage is 30 A (2)
[10]

QUESTION 8: DC MACHINES

8.1 Explain the function of the following protective devices used in DC motor starters:

8.1.1 Overload relay

8.1.2 No-volt release coil

(2 × 2) (4)

8.2 Draw a neat, fully labelled circuit diagram of a short-shunt compound DC motor. (4)

8.3 State TWO applications of DC series motors. (2)
[10]

QUESTION 9: AC MACHINES

9.1 (2)

9.2 FIGURE 3 shows a single-phase induction motor connected to the main circuit.

Identify the components indicated by the arrows in the diagram by writing only the answer next to the question number (9.2.1–9.2.4) in the ANSWER BOOK.

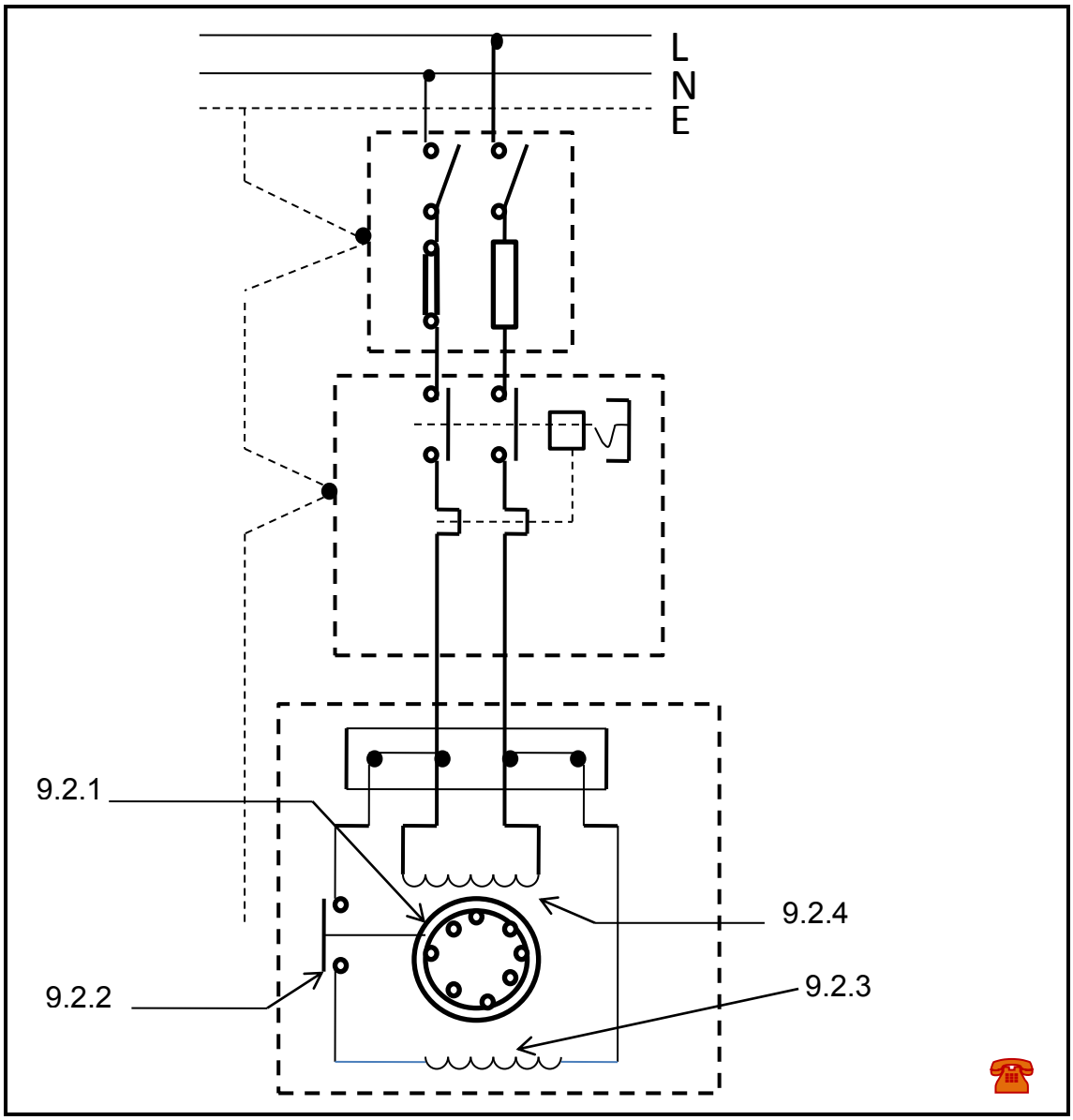

FIGURE 3 (4)

9.3 State how the direction of rotation of the above motor can be reversed. (2)

9.4 What is the purpose of the component numbered 9.2.2? (2)

[10]

QUESTION 10: MEASURING INSTRUMENT AND ELECTRONICS

10.1 Give a definition for each of the following terms:

10.1.1 Ions

10.1.2 Conventional current flow

10.1.3 N-type doping

10.1.4 Holes

(4 × 1) (4)

10.2 Draw a neat, labelled sketch of a permanent magnet moving-coil type. (3)

10.3 Draw a basic diagram that shows a common-emitter transistor amplifier. (2)

10.4 State the current amplification of a common-collector transistor amplifier. (1)

[10]

TOTAL: 100

Copyright reserved

(11041263)

ELECTRICAL TRADE THEORY N3

FORMULA SHEET

$I_T = \frac{V}{Z}$

$I_{ACTIVE} = I_T \cos \emptyset$

$I_{REACTIVE} = I_T \sin \emptyset$

$X_l = 2\pi f L$

$Xc = \frac{1}{2\pi f C}$

$Z = \sqrt{R^2 + (X_L - X_C)^2}$

$\emptyset = Cos^{-1}(\frac{R}{Z})$

$V_R = I_T R$

$V_{XL} = I_T X_L$

$V_{XC} = I_T X_C$

$V = \sqrt{V_R{}^2 + (V_{XL} - V_{XC})^2}$

$P = I^2 R$

$P = \sqrt{3}\, V_L I_L \cos$

$S = VI$

$S = \sqrt{3}\, V_L\, I_L$

DELTA

$V_L = V_{PH/F}$

$I_L = \sqrt{3} I_{PH/F}$

STAR

$V_L = \sqrt{3} V_{PH/F}$

$I_L = I_{PH/F}$

$\frac{V_P}{V_S} = \frac{N_P}{N_S} = \frac{I_S}{I_P}$

$N = \frac{f.60}{P}$

$s = \frac{n - n_r}{n}$

$w = 2\pi f$

The next five formulae are also true for voltage:

$I = I_m \sin$

$I_{ms} = 0{,}707\, I_m$

$I_{ave} = 0{,}632\, I_m$

$I_{rms} = \sqrt{\frac{i1^2 + i2^2 + \cdots in^2}{n}}$

$I_{ave} = \frac{i_1 + i_2 + .. i_n}{n}$

$Form\ factor = \frac{RMS - Value}{AVE - Value}$

$Crest\ factor = \frac{MAX - Value}{RMS - Value}$

SERIES

$R_T = R_1 + R_2 + \cdots R_n$

PARALLEL

$\frac{1}{R_T} = \frac{1}{R_1} + \frac{1}{R_2} + \cdots \frac{1}{R_n}$

Copyright reserved