higher education & training

Department:
Higher Education and Training
REPUBLIC OF SOUTH AFRICA

T520**(E)**(A5)T

NATIONAL CERTIFICATE

ELECTRICAL TRADE THEORY N3

(11041263)

5 April 2018 (X-Paper)
09:00–12:00

This question paper consists of 7 pages and 1 formula sheet.

Copyright reserved

DEPARTMENT OF HIGHER EDUCATION AND TRAINING
REPUBLIC OF SOUTH AFRICA

NATIONAL CERTIFICATE
ELECTRICAL TRADE THEORY N3
TIME: 3 HOURS
MARKS: 100

INSTRUCTIONS AND INFORMATION

1. Answer ALL the questions.
2. Read ALL the questions carefully.
3. Number the answers according to the numbering system used in this question paper.
4. Where applicable, answers must be in accordance with the SABS (SANS) Code of Practice SANS 10142-1:2003 for the Wiring of Premises.
5. Sketches must be neat, labelled and large enough to show the required detail.
6. Formulae needed to answer the questions are attached to the question paper.
7. ALL answers must be rounded off to TWO decimal places.
8. Write neatly and legibly.

Copyright reserved

QUESTION 1: DOMESTIC APPLIANCES

1.1 FIGURE 1 shows a circuit diagram of a stove. Study the circuit diagram and answer the questions.

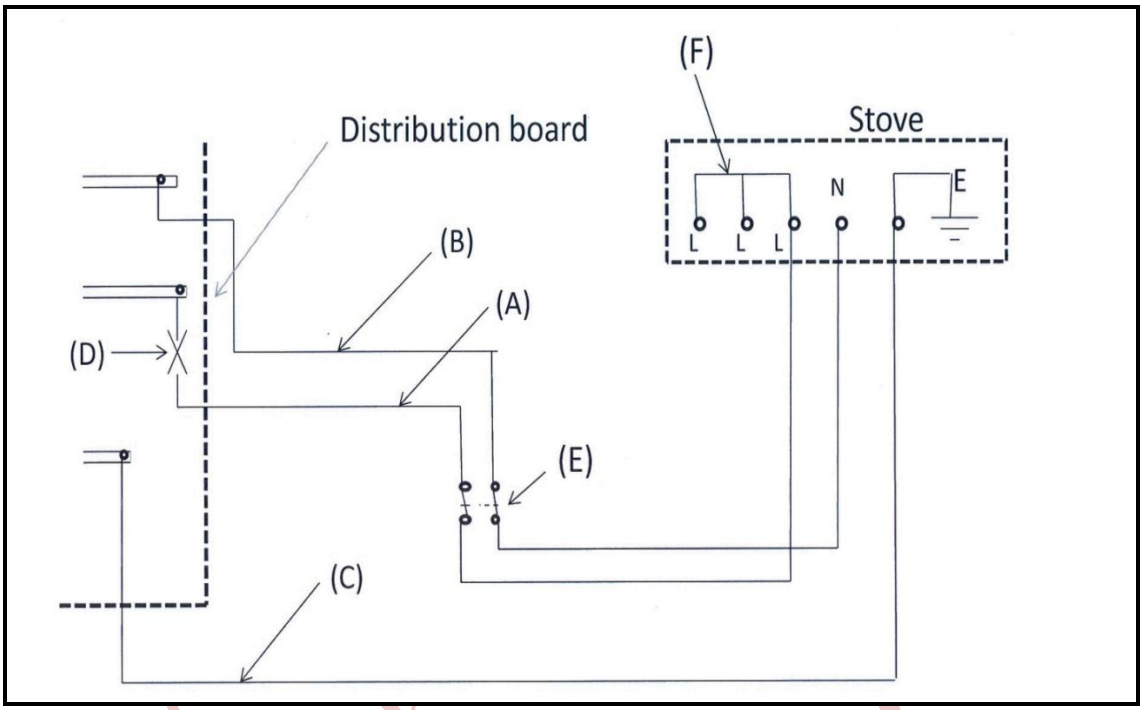

FIGURE 1

1.1.1 State the colour coding for live indicated by letter A, neutral indicated by letter B and earth indicated by letter C. (3)

1.1.2 State the size of the conductors A & B mentioned in QUESTION 1.1.1. (1)

1.1.3 What is the size of the circuit breaker, indicated by the letter D, for the circuit? (1)

1.1.4 Identify the components indicated by letters E and F. (2)

1.2 Name THREE types of valves that are found in a pressure-type geyser. (3)

[10]

QUESTION 2: PROTECTION

2.1 Make a neat, labelled sketch of a thermal magnet-type circuit breaker that is connected from Lin and Lout and indicate the following on the sketch:

- Trip switch
- Flexible lead
- Bi-metal strip
- Spring steel
- Iron armature
- Movement-operated tripping mechanism (6)

Copyright reserved

2.2 Explain how the following is achieved in the above circuit breaker:

2.2.1 Time delay

2.2.2 Operation on short circuit

(2 × 2) (4)
[10]

QUESTION 3: ILLUMINATION

3.1 FIGURE 2 shows a DC fluorescent lamp circuit. Name the components indicated in the sketch by writing only the name of each component next to the question number (3.1.1–3.1.5) in the ANSWER BOOK.

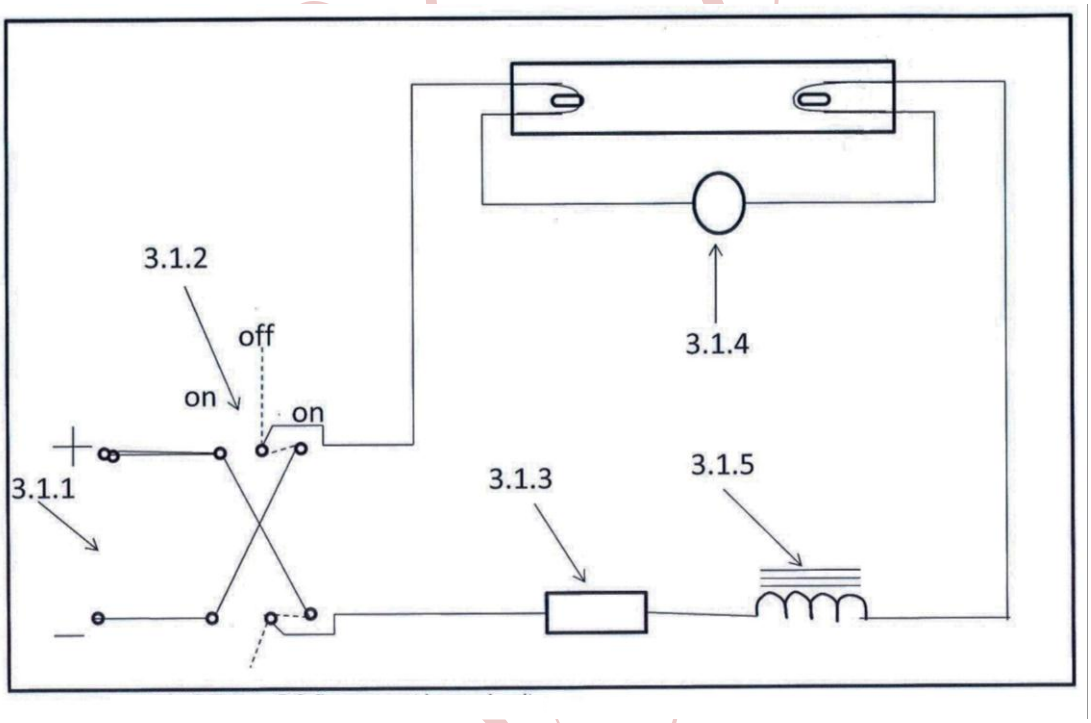

FIGURE 2 (5 × 1) (5)

3.2 Briefly explain why a reversing switch is required in a DC fluorescent lamp circuit. (2)

3.3 State THREE applications where sodium-vapour discharge lamps can be used. (3)
[10]

QUESTION 4: ALTERNATING-CURRENT THEORY

A voltage waveform is represented by v = 200 $\sin 314\ t$ volts

NOTE: The angle is in radians.

Calculate:

4.1 Average value (2)

4.2 Frequency of the wave (2)

4.3 Period time (1)

4.4 Crest factor (2)

4.5 Instantaneous voltage 10 ms after t = 0 seconds (3)

[10]

QUESTION 5: SERIES RLC CIRCUITS

FIGURE 3 shows a series RLC circuit.

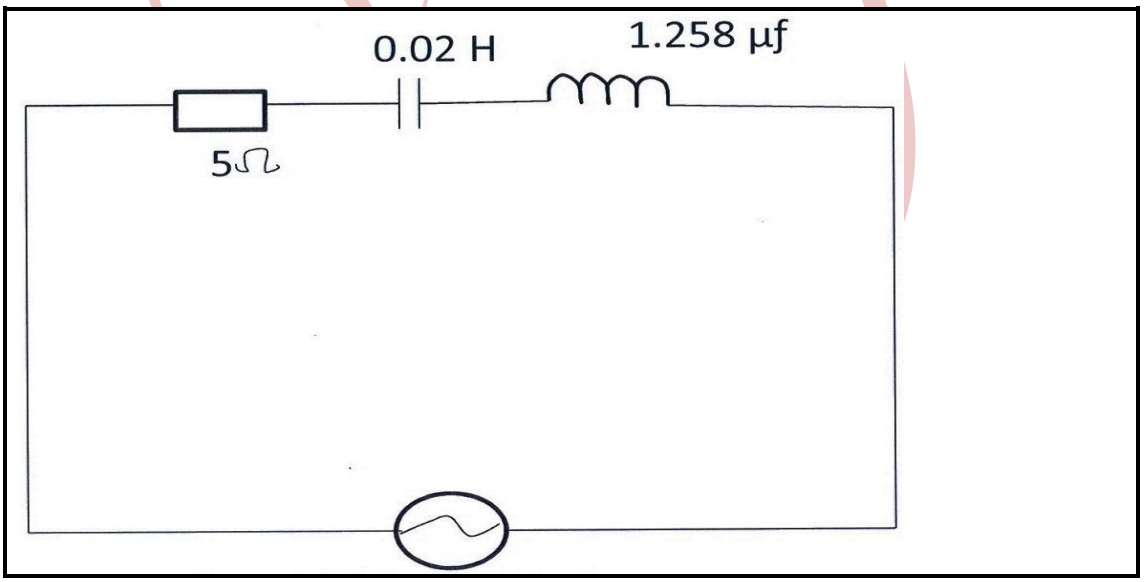

FIGURE 3

5.1 Calculate the inductive reactance. (3)

5.2 Calculate the capacitive reactance. (3)

5.3 State whether the current in this circuit is leading or lagging. Explain why this is the case. (2)

5.4 Draw a voltage phasor diagram representing the circuit in FIGURE 3. Your drawing does not have to be to scale. (2)

[10]

Copyright reserved

QUESTION 6: THREE-PHASE AC SYSTEMS

6.1 A three-phase 10 kW, 415 V motor is started in star and runs in delta.

Calculate the phase voltage when the starter is in the:

6.1.1 Star position (2)

6.1.2 Delta position (1)

6.2 A three-phase delta-connected motor draws 250 A from a 415 V supply at a lagging power factor of 0,86.

Calculate:

6.2.1 Apparent power (2)

6.2.2 Input power (2)

6.2.3 Phase current of the motor winding (3)

[10]

QUESTION 7: TRANSFORMERS

7.1 Explain the operation of a transformer under the following headings:

7.1.1 Method of reduction of eddy current

7.1.2 Type of supply used with this device

(2 × 1) (2)

7.2 A three-phase step-down transformer has a delta-connected primary and a star-connected secondary. The primary line voltage is 66 kV and the secondary line voltage is 11 kV.

Ignore losses and calculate:

7.2.1 The turns ratio (4)

7.2.2 The primary line current if the secondary line current is 100 A (2)

7.2.3 The size of the transformer in MVA (2)

[10]

Copyright reserved

QUESTION 8: DC MACHINES

8.1 State the function of the following components of a DC machine:

8.1.1 Bearings

8.1.2 Commutator

8.1.3 Interpoles

8.1.4 Field coils

(4 × 2) (8)

8.2 Briefly explain the need of a series resistor when starting a large DC motor. (2)

[10]

QUESTION 9: AC MACHINES

9.1 Explain what is meant by synchronous speed with reference to three-phase induction motors. (1)

9.2 Name any THREE types of single-phase AC motors. (3)

9.3 Briefly describe how the starting current is limited in a three-phase slip-ring induction motor. (2 × 2) (4)

9.4 State TWO disadvantages of wound-rotor motors. (2)

[10]

QUESTION 10: MEASURING INSTRUMENTS AND ELECTRONICS

10.1 State TWO types of moving iron instruments. (2)

10.2 Make a drawing of each of the following:

10.2.1 A neat, labelled circuit diagram of a half-wave rectifier using one diode (3)

10.2.2 Waveforms to show the input wave and output wave of the circuit in QUESTION 10.2.1 if the supply is sinusoidal (4)

10.3 State ONE use of a diode. (1)

[10]

TOTAL: 100

Copyright reserved

ELECTRICAL TRADE THEORY N3

FORMULA SHEET

$$I_T = \frac{V}{Z}$$

$$I_{ACTIVE} = I_T \text{ Cos } \phi$$

$$I_{REACTIVE} = I_T \text{ Sin } \phi$$

$$X_L = 2\pi f L$$

$$X_C = \frac{1}{2\pi fC}$$

SERIES

$$Z = \sqrt{R^2 + (X_L - X_C)^2}$$

$$\phi = \text{Cos}^{-1}\left(\frac{R}{Z}\right)$$

$$V_R = I_T R$$

$$V_{XL} = I_T X_L$$

$$V_{XC} = I_T X_C$$

$$V = \sqrt{V_R{}^2 + (V_{XL} - V_{XC})^2}$$

$$S = VI$$

$$P = I^2 R$$

3-PHASE

$$P = \sqrt{3}\ V_L I_L \text{ Cos } \phi$$

$$S = \sqrt{3}\ V_L\ I_L$$

DELTA

$$V_L = V_{PH/F}$$

$$I_L = \sqrt{3} I_{PH/F}$$

STAR

$$V_L = \sqrt{3} V_{PH/F}$$

$$I_L = I_{PH/F}$$

$$\frac{V_p}{V_s} = \frac{N_p}{N_s} = \frac{I_s}{I_p}$$

$$N = \frac{f.60}{p}$$

$$s = \frac{n - n_r}{n}$$

$$\omega = 2\pi f$$

The next five formulae are also true for voltage

$$i = I_m \text{ Sin } (\omega t)$$

$$I_{rms} = 0{,}707\ I_m$$

$$I_{ave} = 0{,}637\ I_m$$

$$I_{rms} = \sqrt{\frac{i_1{}^2 + i_2{}^2 + \ldots i_n{}^2}{n}}$$

$$I_{ave} = \frac{i_1 + i_2 + .. i_n}{n}$$

$$\text{Form factor} = \frac{\text{RMS-value}}{\text{AVE-value}}$$

$$\text{Crest factor} = \frac{\text{MAX-value}}{\text{RMS-value}}$$

SERIES

$$R_T = R_1 + R_2 + \ldots R_n$$

PARALLEL

$$\frac{1}{R_T} = \frac{1}{R_1} + \frac{1}{R_2} + \ldots \frac{1}{R_n}$$

Copyright reserved