higher education & training

Department:
Higher Education and Training
REPUBLIC OF SOUTH AFRICA

MARKING GUIDELINE

NATIONAL CERTIFICATE

APRIL EXAMINATION

ELECTRICAL TRADE THEORY N3

5 APRIL 2016

This marking guideline consists of 8 pages.

Copyright reserved

NOTE: There is not only one answer or one method (approach) of answering the questions. This memorandum gives only one answer or one possible method (approach). Examiners must analyse the student's solution to determine if the question has been answered and therefore must not adhere strictly to this memorandum.

QUESTION 1: DOMESTIC APPLIANCES

1.1
- 25 mm conduit installed from D.B to stove.
- Isolator box not more than 0,5 m from stove.
- Flexible conduit between wall and stove.
- 6 mm^2 L, N and E conductors from D.B to stove.

(4 x 1) (4)

1.2
- Make sure the disconnector is off.
- Place meter on ohms scale and measure between live and neutral.
- Switch the stove plate or the oven on.
- Ohms value should be low. (Any 3 x 1) (3)

1.3

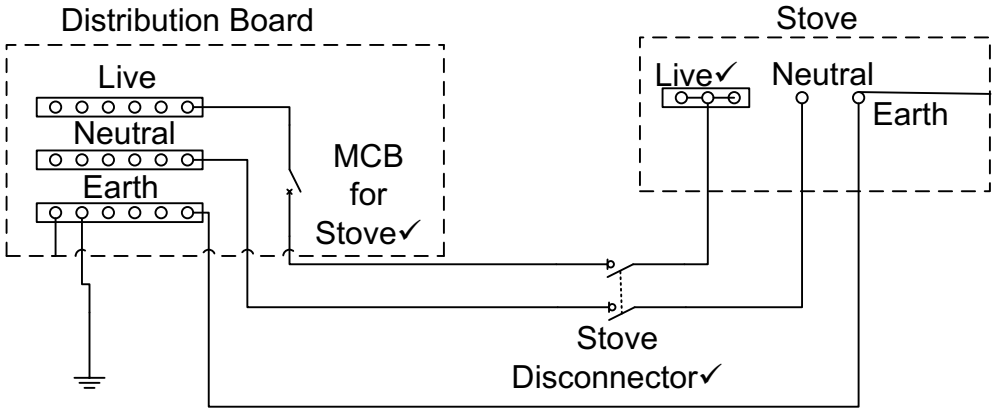

(3)

[10]

QUESTION 2: PROTECTION

2.1 Live ✓and neutral. ✓ (2)

2.2 Approximately 20 mA ✓ and higher. ✓ (2)

2.3
- When the live and neutral wire current is the same,✓ the magnetic fields cancel each other since the current flows in opposite directions.✓
- No EMF will be induced in the secondary.✓
- If an earth fault occurs, the live will carry more current than the neutral✓ and
- at 20 mA✓ the resultant field will be strong enough to activate the relay.✓ (6)

[10]

QUESTION 3: ILLUMINATION

3.1 3.1.1 False
3.1.2 False
3.1.3 True
3.1.4 False
3.1.5 True

(5 x 1) (5)

3.2

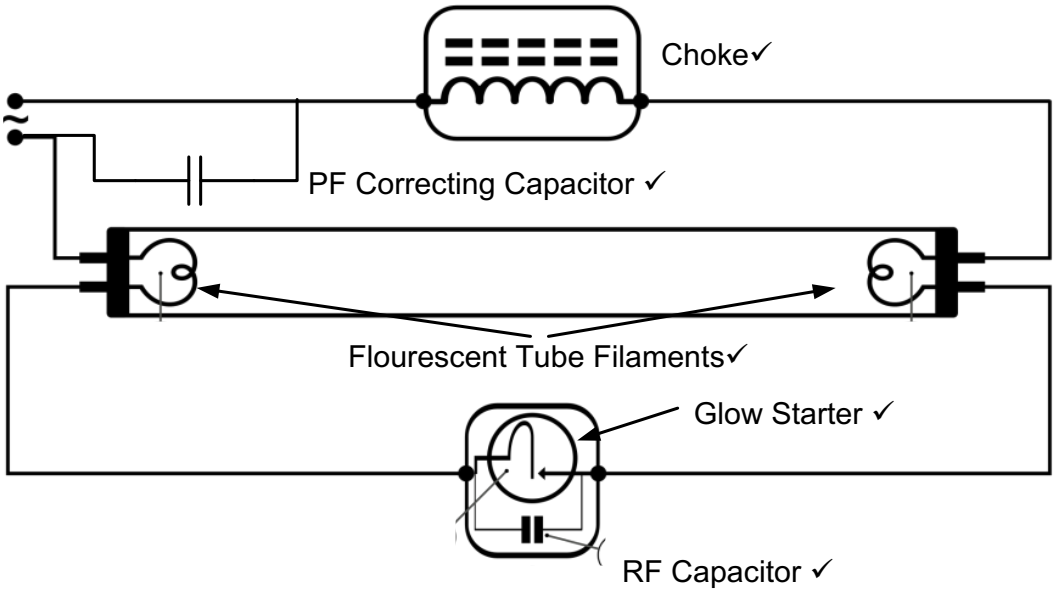

(5)
[10]

QUESTION 4: ALTERNATING CURRENT THEORY

4.1 4.1.1 $V_{RMS} = V_{Maximum} \times 0{,}707$ ✓
$V_{RMS} = 310 \times 0{,}707$ ✓
$V_{RMS} = 219{,}17\ Volt$ ✓

(3)

4.1.2

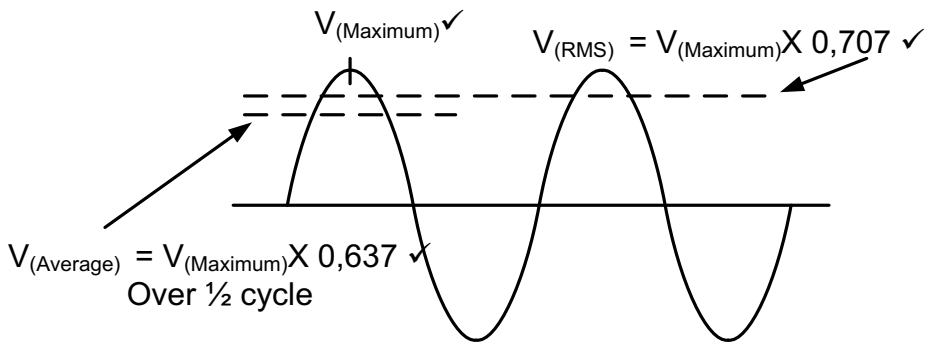

(3)

4.2

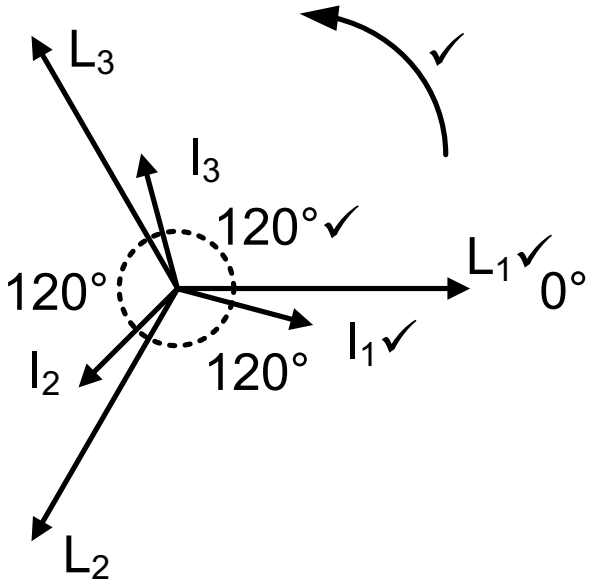

(4)

[10]

QUESTION 5: SERIES RLC CIRCUITS

5.1 5.1.1 $X_L = 2.\pi.f.L$ ✓
$X_L = 2.\pi.50.0,1$ ✓
$X_L = 31,4\ \Omega$✓ (3)

5.1.2 $Z = \sqrt{R^2 + (X_L \simeq X_C)^2}$✓
$Z = \sqrt{5^2 + (31,4 \simeq 27.65)^2}$✓
$Z = \sqrt{25 + (3,75)^2}$
$Z = 6,25\Omega$ ✓ (3)

5.1.3

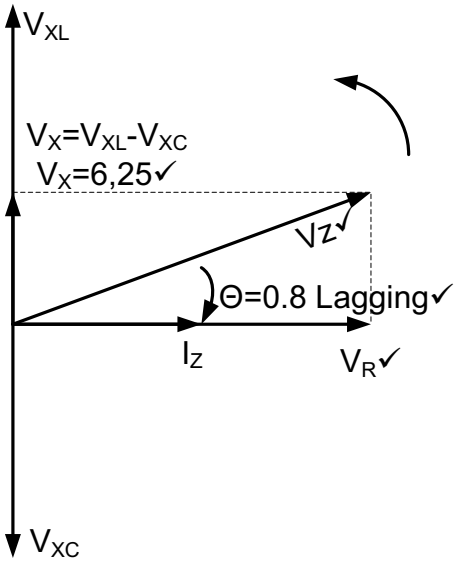

(4)

Note to Marker
Must show lagging p.f OR $X_L \gg X_C$]
Vz leads I_Z
Φ = angle between V_Z and V_R

[10]

QUESTION 6: THREE-PHASE AC SYSTEMS

6.1 $P = \sqrt{3} \times V_L \times I_L \times \cos\Phi$✓
$P = \sqrt{3} \times 420 \times 23 \times \cos 9°$✓
$P = 16525{,}619\ Watt$✓ (3)

6.2 $V_L = \sqrt{3}.xV_{ph}$ ✓
$= \sqrt{3}$ x 220✓
= 381 V✓ (3)

6.3 $P_{in} = \sqrt{3}V_L I_L \cos\Phi$ x η✓
$= \sqrt{3}$.380 X 42,2 X 0,8 X 0.9✓
= 19 998.12 Watt ✓

η = 90% = 0.9✓
If candidate can show 90% efficiency = 0.9 as a factor of 1 = fourth mark is awarded. (4)
[10]

QUESTION 7: TRANSFORMERS

7.1

7.1.1 Delta✓: Star✓ connected transformer
Note: Order must be correct (2)

7.2 Step down transformer✓. 550:1 indicates 550 turns for every 1 turn on the secondary (1)

7.3 Neutral = 4✓
(1)

7.4 $V_{a1a2} = V_{A1A2} \div T.R$✓
= 380 ÷ 1/10✓
=3 800 V✓ (3)

7.5 $P = \sqrt{3}$ x V_L x I_L cosø✓
$= \sqrt{3}$ x 380 x 2 x 0,8 ✓
= 5,77 A ✓ (3)

[10]

Copyright reserved

QUESTION 8: DC MACHINES

8.1 8.1.1 For speed control

8.1.2 To disconnect the motor when the supply voltage is too low

8.1.3 To trip when the motor draws too much current

(3 x 1) (3)

8.2
- Shunt
- Series
- Combination of series and parallel (Any 2 x 1) (2)

8.3
- Brush shifting
- Interpoles
- Compensating windings, add a series field. (Any 2 x 1) (2)

8.4
- Connect the 4 windings in series to a low voltage supply.
- Use a voltmeter to measure the voltage across each winding.
- The readings should be the same across all the poles. (3 x 1) (3)

[10]

QUESTION 9: AC MACHINES

9.1 The running winding has less turns✓ in the coils than the starter winding, but it is of a thicker wire, thus having less inductance and less resistance✓, ergo less reactance. (2)

9.2

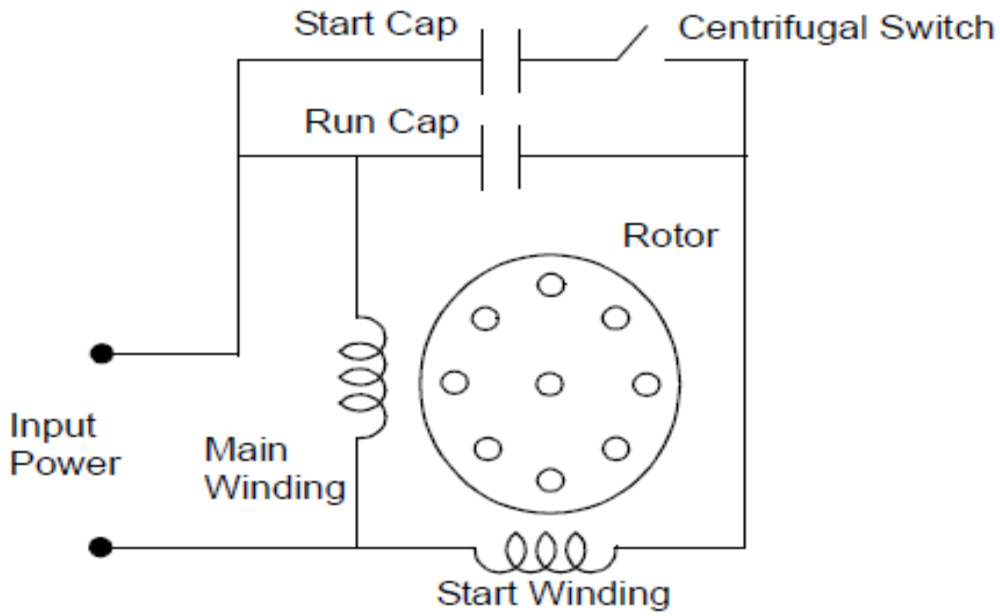

Note to marker:
- Must show Centrifugal switch in series with starter capacitor and labelled.
- Run Cap must be permanently connected in circuit and labelled.
- Main Winding / run Winding in parallel with supply (3)

9.3 The starting arm must move back to the OFF position during loss of supply. (1)

9.4
- The motor will only start up if the resistors are in circuit
- and the brushes are on (short-circuit rings open).
- As the motor gains speed the resistors are gradually removed from the circuit. (4)
- Once removed, the slip rings are short-circuited. **[10]**

QUESTION 10: MEASURING INSTRUMENTS AND ELECTRONICS

10.1 10.1.1 Insert a shunt resistor (parallel to meter) into the circuit. (1)

10.1.2 Insert a resistor in series with the meter. (1)

10.1.3
- Use instrument transformers.
- The secondary of a current transformer supplies the current coil of the meter and
- the secondary of a potential transformer supplies the voltage coil of the meter (3)

10.2 10.2.1 Flow of electrons in the external circuit (not in the battery) from negative pole to positive pole.

10.2.2 Material with special properties and electrical resistance between a conductor and an insulator.

10.2.3 Atoms with fewer electrons than protons.

10.2.4 An impurity added to Si or Ge that has only 3 valence electrons.

10.2.5 An atom that has 5 valence electrons (electrons available for bonding).

(5 x 1) (5)

[10]

TOTAL: 100

Copyright reserved