higher education & training

Department:
Higher Education and Training
REPUBLIC OF SOUTH AFRICA

T450(E)(J23)T

AUGUST EXAMINATION

NATIONAL CERTIFICATE

ELECTRICAL TRADE THEORY N3

(11041263)

23 July 2014 (Y-Paper)
13:00–15:00

This question paper consists of 9 pages and 1 formula sheet.

ENGINEERING

Copyright reserved

DEPARTMENT OF HIGHER EDUCATION AND TRAINING
REPUBLIC OF SOUTH AFRICA

NATIONAL CERTIFICATE
ELECTRICAL TRADE THEORY N3
TIME: 2 HOURS
MARKS: 100

INSTRUCTIONS AND INFORMATION

1. Answer ALL the questions.
2. Read ALL the questions carefully.
3. Number the answers according to the numbering system used in this question paper.
4. Where applicable, *answers must be* in accordance with the SABS (SANS) Code of Practice SANS 10142-1:2003 for the Wiring of Premises.
5. Sketches must be neat, labelled and large enough to show the required detail.
6. Formulae used in Electrical Trade Theory N3 can be found at the end of the question paper.
7. Answers must be given to TWO decimal places.
8. Write neatly and legibly.

ENGINEERING

Copyright reserved

QUESTION 1: DOMESTIC APPLIANCES

1.1 Name the alloy that is normally used for manufacturing heating elements. (1)

1.2 Briefly describe the type of thermostat you would expect to find in a/an:

1.2.1 Laundry iron

1.2.2 Oven

1.2.3 Fridge or freezer

1.2.4 Geyser

(4 x 1) (4)

1.3 Draw a neat, labelled wiring diagram that illustrates the stove terminal connection to the distribution board. (5)

[10]

QUESTION 2: PROTECTION

2.1 Identify the error made in the following statements: Write only the answer next to the question number (2.1.1–2.1.4) in the ANSWER BOOK.

2.1.1 Touch voltage occurs because the equipment you are touching is at the same potential as the ground you are standing on.

2.1.2 A floating earth is connected to the earth pin of the three-pin plug top.

2.1.3 The earth leakage protection will disconnect the circuit if the load current is too high.

2.1.4 An isolating transformer is a transformer that has no exposed metal parts.

(4 x 1) (4)

2.2 Name TWO safety precautions which would reduce the danger when using a washing machine. (2)

2.3 Name TWO advantages that circuit breakers have over HRC fuses. (2)

2.4 Show by means of a neat, labelled sketch how an earth leakage tester is connected to a socket outlet, when testing the effectiveness of an earth leakage relay. (2)

[10]

ENGINEERING

Copyright reserved

QUESTION 3: ILLUMINATION

3.1 Give TWO advantages of incandescent lamps. (2)

3.2 Give ONE disadvantage of incandescent lamps. (1)

3.3 Explain luminous efficiency. (2)

3.4 Study the circuit in FIGURE 3.1 and answer the questions.

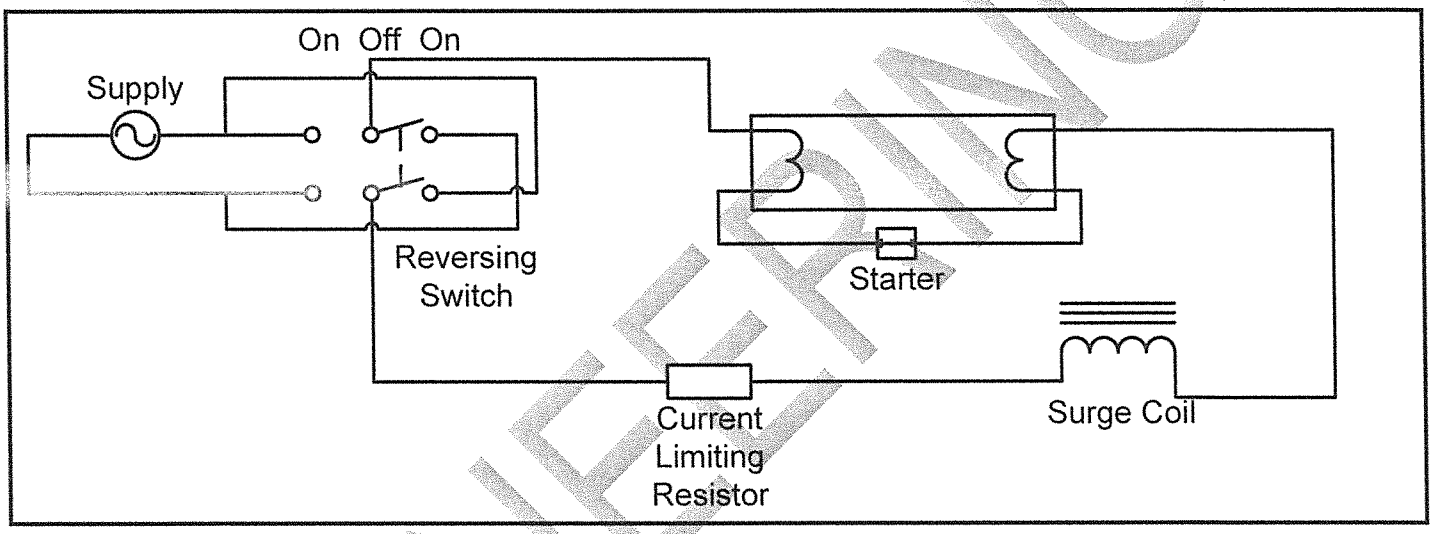

FIGURE 3.1: LIGHTING CIRCUIT

3.4.1 Identify the type of supply used with this circuit.

3.4.2 Identify the function of the reversing switch.

3.4.3 State the approximate voltage over the current limiting resistor during operation.

3.4.4 State the purpose of the surge coil.

3.4.5 Identify the type of lamp used in this circuit.

(5 x 1) (5)
[10]

ENGINEERING

Copyright reserved

QUESTION 4: ALTERNATING-CURRENT THEORY

4.1 FIGURE 4.1 shows a 3-phase generator. There are three identical single-phase armature windings wound on the same core. The windings are displaced by 120° and rotating in the same magnetic field. A 380-V EMF is generated in each winding, in the form of a sine wave.

Illustrate the difference in the three generated waves by drawing it on a single set of axes. (Use an appropriate scale on the X- and Y-axes). (3)

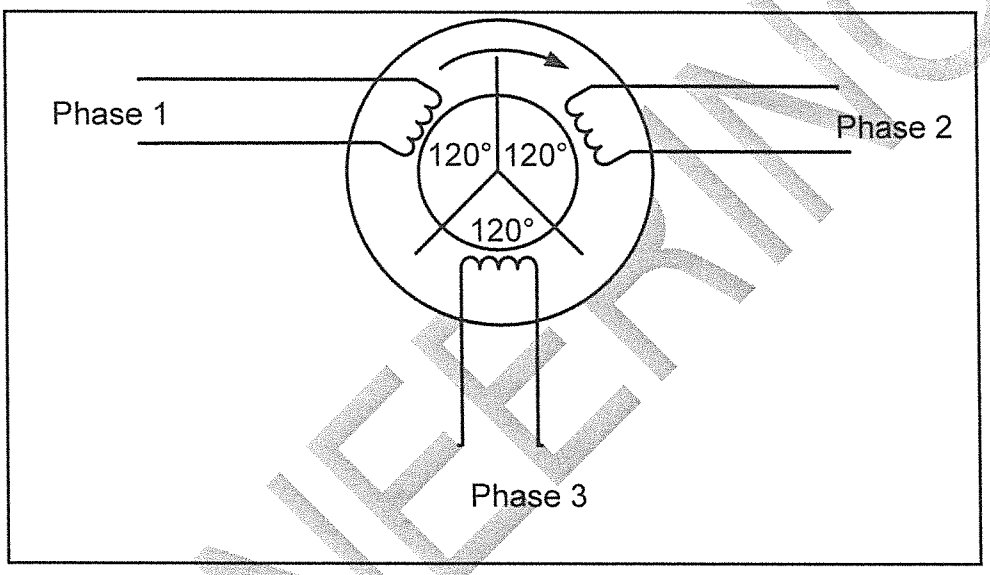

FIGURE 4.1: 3-PHASE GENERATOR

4.2 A sine wave form has the following characteristics:

E_M = 310 Volt
F= 1432 Hz

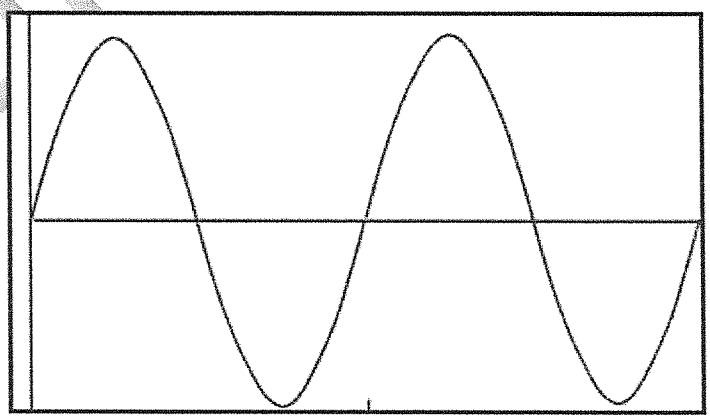

FIGURE 4.1: SINE WAVE

Calculate the following:

4.2.1 RMS value (3)

4.2.2 Instantaneous value of *e* when t = 1 mS(millisecond) (4)

[10]

ENGINEERING

Copyright reserved

QUESTION 5: SERIES RLC CIRCUITS

5.1 Study the circuit in FIGURE 5.1 and answer the questions.

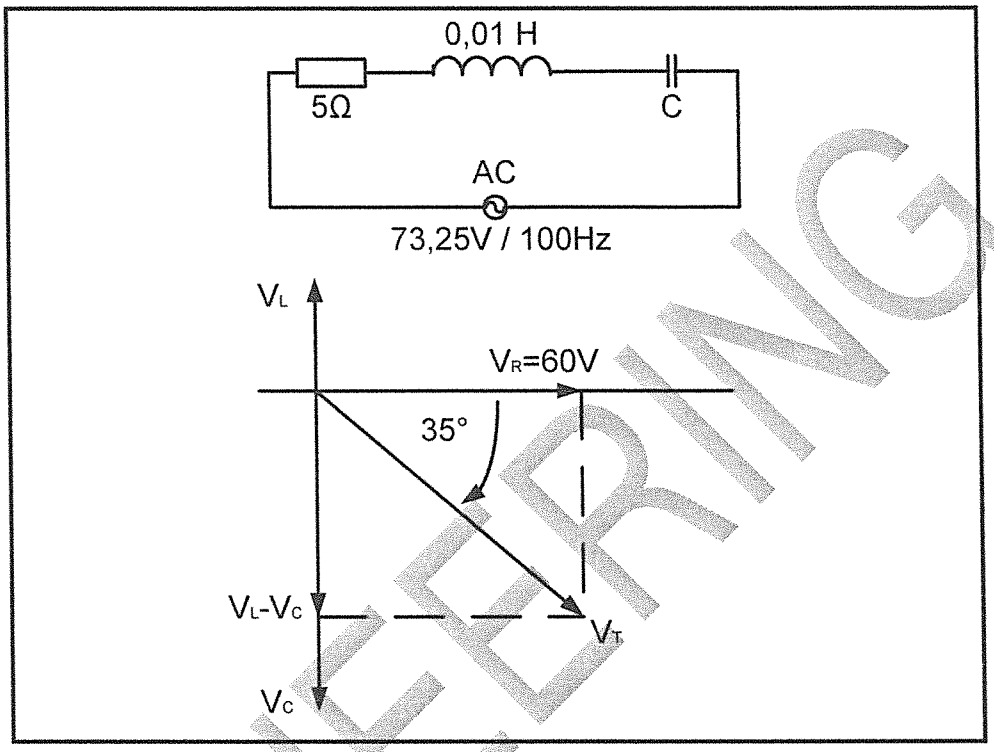

FIGURE 5.1: RLC CIRCUIT

Calculate:

5.1.1 Inductive Impedance (3)

5.1.2 The value of VL-VC (3)

5.1.3 The value of C if X_C=9,78 Ω (3)

5.2 State whether the magnitudes of the true and apparent power are equal for this circuit. (1)

[10]

ENGINEERING

Copyright reserved

QUESTION 6: THREE-PHASE AC SYSTEMS

Three identical loads are connected to a 3-phase 380-V supply. Each load is purely resistive and the total consumption is 3,8 kW.

6.1 Draw a circuit diagram that shows the loads connected in delta and connected to the supply. (4)

6.2 Write the voltage values between all conductors in the diagram. (1)

6.3 Calculate the value of the phase current flowing in Line 1. (3)

6.4 State what will happen to the nature of the current flowing in the circuit if the resistive load is changed to an inductive load. (1)

[10]

QUESTION 7: TRANSFORMERS

7.1 A 20 MVA 3-phase 132 kV/11 kV delta-star transformer has 100 turns on the secondary. Calculate the following:

7.1.1 Turns Ratio of the transformer (3)

7.1.2 The number of turns on the primary side of the transformer. (2)

7.1.3 Output power at a power factor of 0,8 (3)

7.2 Name TWO uses (applications) of transformers. (2)

[10]

QUESTION 8: DC MACHINES

8.1 Explain the principle of operation of the direct-current motor. (3)

8.2 Explain the principle of operation of the direct-current generator. (3)

8.3 Explain how a large DC motor can be started without damaging the motor or motor circuit. (2)

8.4 While the motor is turning, there is a power cut. Explain how the protective circuitry will prevent the motor from automatically starting up as soon as the supply voltage returns. (2)

[10]

ENGINEERING

Copyright reserved

QUESTION 9: AC MACHINES

9.1 Name TWO types of single-phase AC motors. (2)

9.2 Name TWO tests that can be performed on a motor's stator coils. (2)

9.3 State the purpose of the overload relay in a motor circuit. (1)

9.4 Identify the error in the statements below. Write only the answer next to the question number (9.4.1.–9.4.4) in the ANSWER BOOK.

9.4.1 Direct-on-line starting places a voltage on the stator coils that is $\sqrt{3}$ times smaller than the supply voltage.

9.4.2 In rotor resistance starters there are resistors connected to the stator coils during starting.

9.4.3 The starting winding of a split-phase motor is placed closer to the yoke of the motor than the running winding.

9.4.4 A centrifugal switch will automatically disengage when the current is high.

(4 x 1) (4)

9.5 State how the direction of rotation of a three-phase motor can be changed. (1)

[10]

QUESTION 10: MEASURING INSTRUMENTS AND ELECTRONICS

10.1 Study the circuit below.

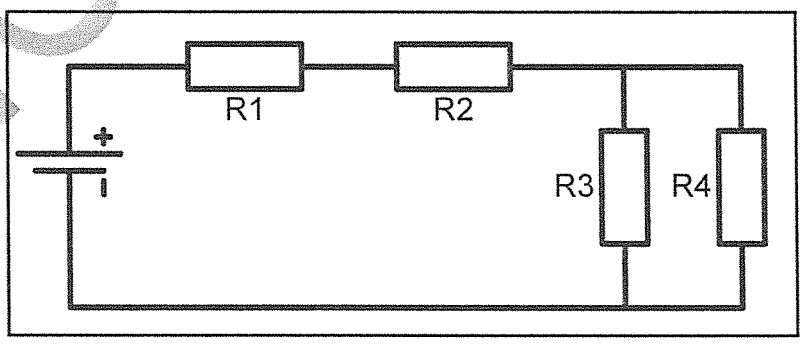

FIGURE 10.1: ELECTRONIC CIRCUIT

Without performing any calculations, redraw the circuit in your ANSWER BOOK and add THREE measuring instruments in the diagram that will measure the current through resistor R_4, the voltage across resistor R_2 and the power consumed by resistor R_3. (6)

ENGINEERING

10.2 Name TWO basic configurations in which transistors can be connected in an amplifier circuit. (2)

10.3 What is the purpose of a smoothing capacitor? (1)

10.4 Give ONE use of a diode. (1)
[10]

TOTAL: 100

ENGINEERING

Copyright reserved

FORMULA SHEET

$$I_T = \frac{V}{Z}$$

$$I_{ACTIVE/AKTIEWE} = I_T Cos\theta$$

$$I_{REACTIVE/REAKTIEWE} = I_T Sin\theta$$

$$X_L = 2\pi fL$$

$$X_C = \frac{1}{2\pi fC}$$

$$\frac{V_p}{V_s} = \frac{N_p}{N_s} = \frac{I_s}{I_p}$$

$$\omega = 2\pi f$$

$$N = \frac{f.60}{p}$$

$$s = \frac{n - n_r}{n}$$

The next five formulae are also true for voltage / Die volgende vyf formules geld ook vir spanning

$$i = I_m Sin(\omega t)$$

$$I_{rms/wgk} = 0,707 I_m$$

$$I_{ave/gem} = 0,637 I_m$$

$$I_{rms/wgk} = \sqrt{\frac{i_1^2 + i_2^2 + ...i_n^2}{n}}$$

$$I_{ave/gem} = \frac{i_1 + i_2 + ...i_n}{n}$$

Form factor/Vormfaktor

$$= \frac{RMS - value/WGK - waarde}{AVE - value/GEM - waarde}$$

Crest factor/Kruinfaktor

$$= \frac{MAX - value/MAKS - waarde}{RMS - value/WGK - waarde}$$

Series/Serie

$$R_T = R_1 + R_2 + ...R_n$$

Parallel

$$\frac{1}{R_T} = \frac{1}{R_1} + \frac{1}{R_2} + ...\frac{1}{R_n}$$

Series / Serie

$$Z = \sqrt{R^2 + (X_L - X_C)^2}$$

$$\theta = Cos^{-1}\left[\frac{R}{Z}\right]$$

$$V_R = I_T R$$

$$V_{X_L} = I_T X_L$$

$$V_{X_C} = I_T X_C$$

$$V = \sqrt{V_R{}^2 + (V_{X_L} - V_{X_C})^2}$$

$$P = I^2 R$$

$$S = VI$$

3 – phase / 3 – fase

$$P = \sqrt{3} V_L I_L Cos\theta$$

$$S = \sqrt{3} V_L I_L$$

Delta

$$V_L = V_{PH/F}$$

$$I_L = \sqrt{3} I_{PH/F}$$

Star / Ster

$$V_L = \sqrt{3} V_{PH/F}$$

$$I_L = I_{PH/F}$$

ENGINEERING

Copyright reserved

higher education & training

Department:
Higher Education and Training
REPUBLIC OF SOUTH AFRICA

MARKING GUIDELINE

NATIONAL CERTIFICATE

AUGUST EXAMINATION

ELECTRICAL TRADE THEORY N3

23 JULY 2014

This marking guideline consists of 7 pages.

Copyright reserved

QUESTION 1

1.1 Nichrome.✓ (1)

1.2 1.2.1 Bimetal strip that bends and opens contacts ✓

1.2.2 Capillary tube with bellows ✓

1.2.3 Capillary tube with bellows ✓

1.2.4 Submersible type with brass that expands ✓

(4 x 1) (4)

1.3

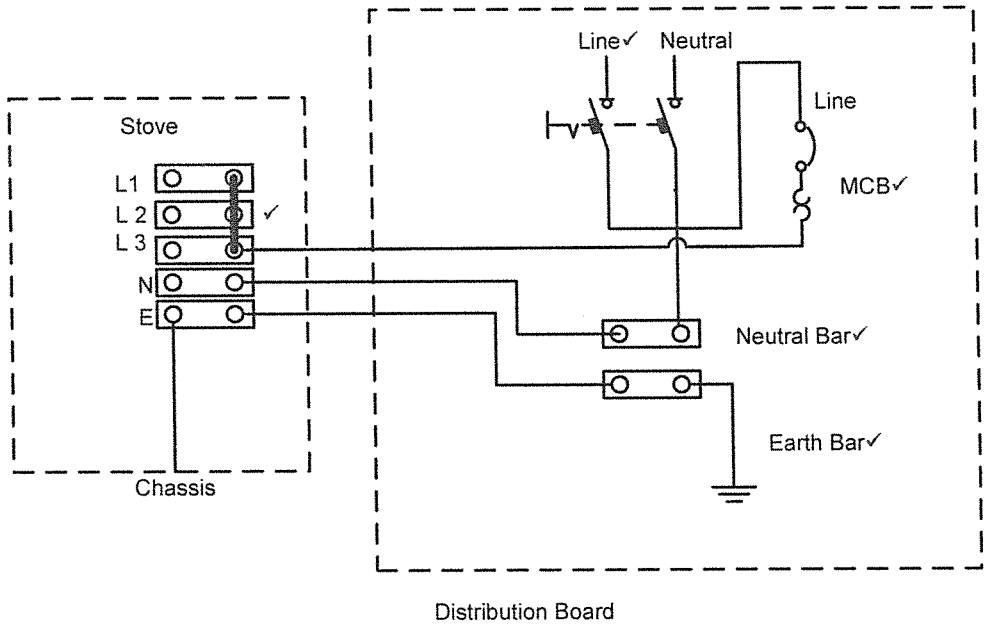

(a) Earth bar ✓
(b) Circuit breaker ✓
(c) Live bar ✓
(d) Disconnector ✓
(e) 3-phase stove adapted for single-phase supply ✓

(5)
[10]

Copyright reserved

QUESTION 2

2.1 2.1.1 Will not occur OR should be at different potential ✓

2.1.2 Need not be earthed OR will not be floating ✓

2.1.3 Leakage current OR the MSB ✓

2.1.4 No connection between primary and secondary ✓

(Any 4 x 1) (4)

2.2 Wear rubber soled shoes while touching the washing machine. ✓ Ensure that the power cords and plug tops are in good condition. ✓ (Any 2 x 1) (2)

2.3 (a) Not destroyed ✓
(b) Quick to reset ✓
(c) Can be used as a switch
(d) Cannot tamper with rating (Any 2 x 1) (2)

2.4

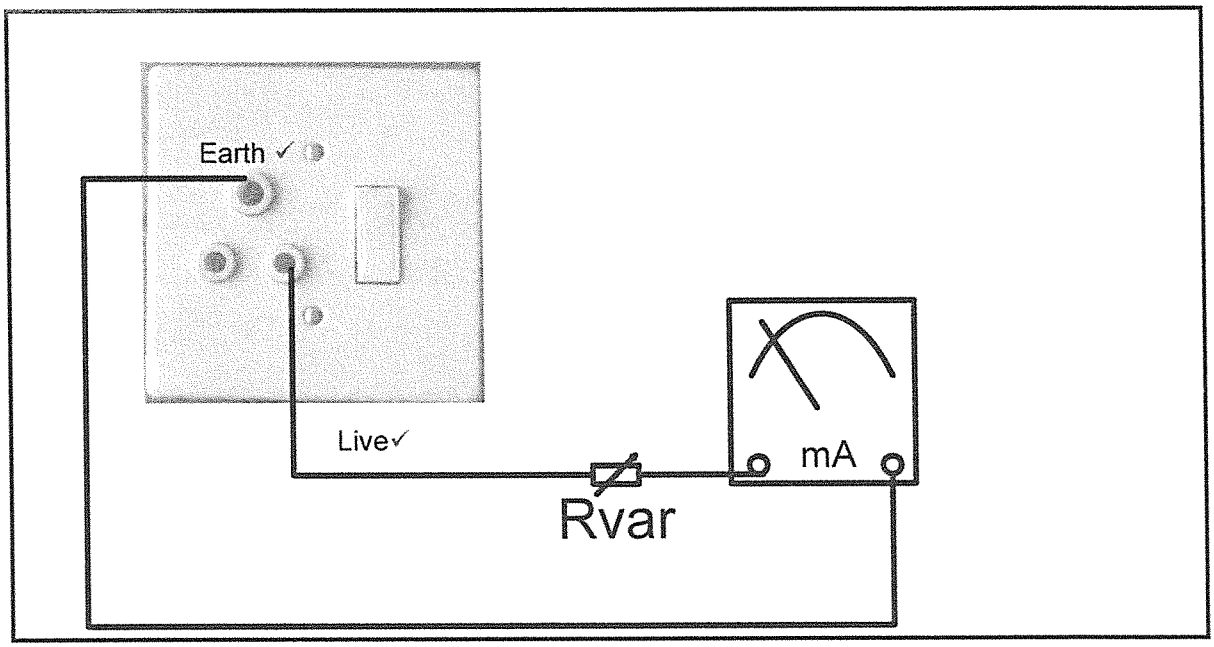

(2)
[10]

QUESTION 3

3.1 Cheap to replace, ✓ bright light, ✓ white light, etc. (Any 2 x 1) (2)

3.2 Efficiency is low, produces heat, etc. ✓ (Any 1) (1)

3.3 High luminous efficiency✓ if most of the electrical energy is converted to light energy. ✓ (2)

3.4 3.4.1 DC ✓

3.4.2 To prevent darkening on one side, mercury does not migrate to one side, etc. ✓

3.4.3 Half of supply voltage ✓

3.4.4 To start the lamp ✓

3.4.5 Fluorescent lamp ✓

(5 x 1) (5)
[10]

Copyright reserved

QUESTION 4

4.1 4.1.1

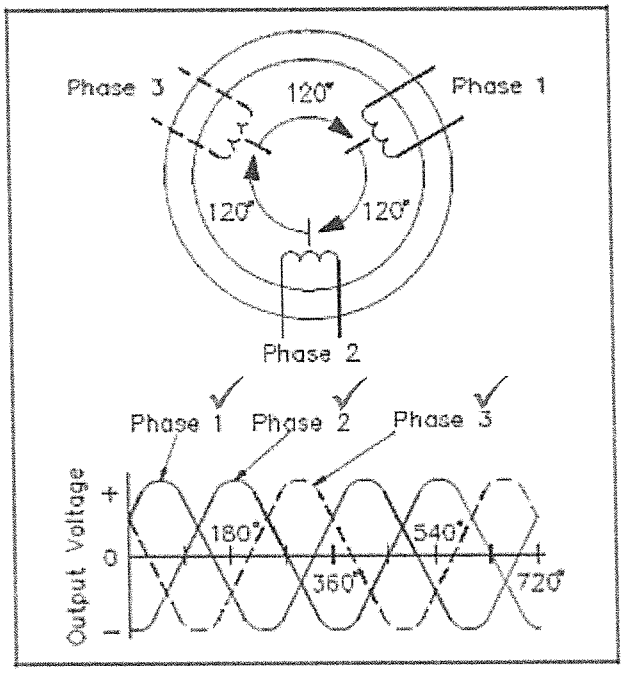

(3)

4.2 4.2.1 RMS = $0,707.E_m$✓
= 0,707x310 ✓
= 219,17 V✓

(3)

4.2.2 t=1mS=0,001S✓

$e = E_M \sin(2\pi Ft)$✓
$e = 310 \sin(2 \times \pi \times 9000 \times 0,001)$✓
$\underline{e = 48Volt}$✓

(4)

[10]

QUESTION 5

5.1

5.1.1 $X_L = 2\pi fL$ ✓
$= 2\pi x100x0,01$ ✓
$= 6,28\ \Omega$ ✓ (3)

5.1.2 $\tan\theta = \frac{V_C - V_L}{V_R}$
$\tan 35° = \frac{V_C - V_L}{60}$ ✓
$V_C - V_L = \tan 35° \times 60$✓
$V_C - V_L = 42.01\ Volt$✓ (3)

5.1.3 $X_C = \frac{1}{2\pi fC}$
$C = \frac{1}{2\pi f X_c}$✓
$C = \frac{1}{2 \times \pi \times 100 \times 9,78}$✓
$C = 1.62 \times 10^{-4}$
$C = 162 \times 10^{-6}$
$C = 162\mu F$✓ (3)

5.2 No✓ (1)

[10]

Copyright reserved

QUESTION 6

6.1

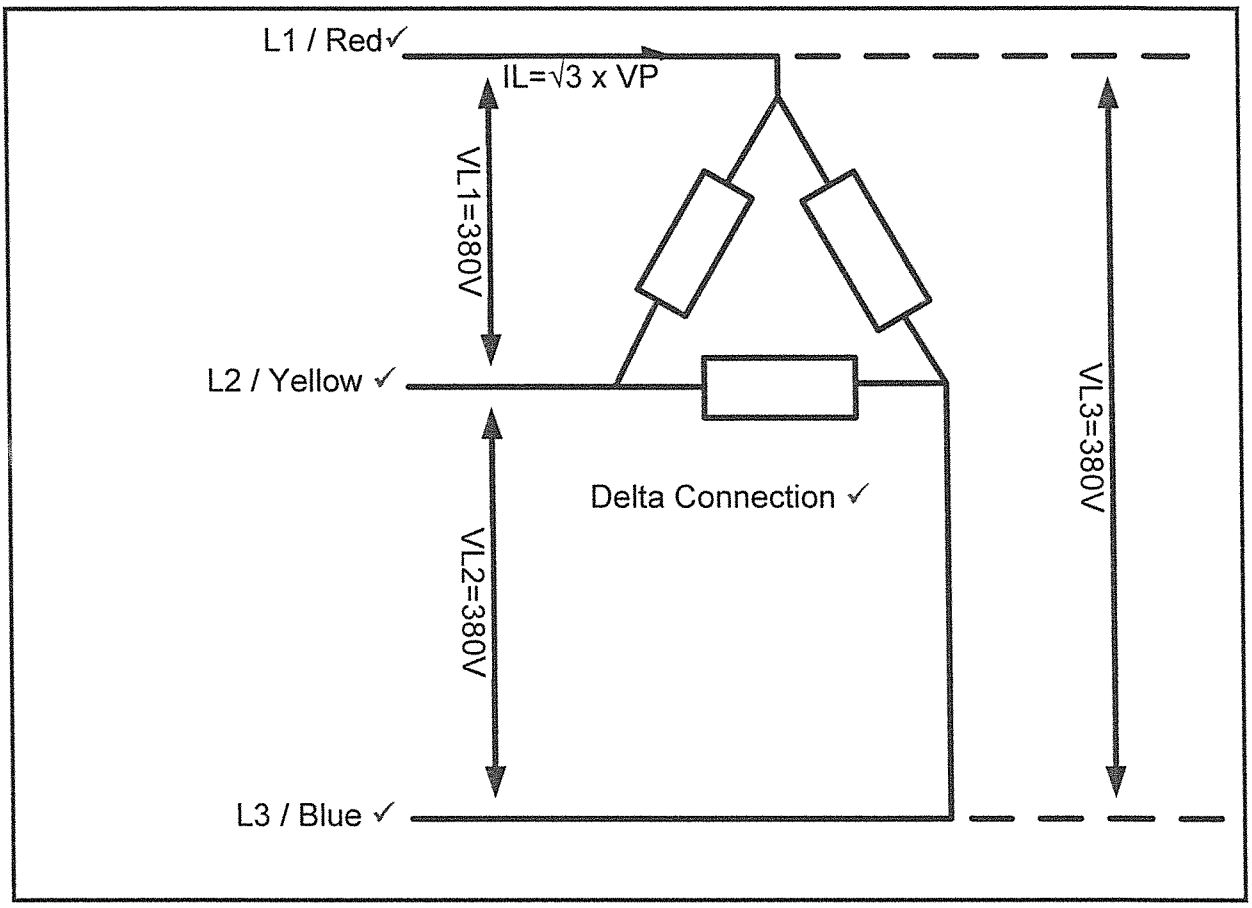

(4)

6.2 VL1 = VL2 = VL3✓ = 380 V ✓ (2)

6.3 $P_T = \sqrt{3} \times V_L \times I_L \cos\theta$ ✓

$3800 = \sqrt{3} \times 380 \times I_L \cos 0$ ✓

$$I_L = \frac{3800}{\sqrt{3} \times 380 \times 1}$$

$$I_L = \frac{3800}{658{,}179}$$

$I_L = 5.773 Ampère$ ✓ (3)

6.4 Making the load inductive will cause the total current to lag behind the supply voltage. (1)

[10]

Copyright reserved

QUESTION 7

7.1 7.1.1 $T.R = {}^{V_{primph}}/_{V_{secph}} \checkmark = \frac{132000}{11000/\sqrt{3}} \checkmark = \frac{132000}{6351} = 20{,}78{:}1 \checkmark$ (3)

7.1.2 T.R = N_p/N_s
N_p = 20,78 x 100 ✓
N_p = 2 078 turns✓ (2)

7.1.3 Output power
P = Sx cosΦ ✓
= ($20x10^6$)x 0,8 ✓
= 16 x 10^6 W
=16 MW✓ (3)

7.2 To step voltages down or up.✓ To isolate primary from secondary. ✓
(Any 2 x 1) (2)

[10]

QUESTION 8

8.1 A moving (changing) magnetic field (cutting the conductor) ✓ plus a current carrying conductor. ✓The conductor will experience a force on it. ✓ (3)

8.2 A force on a conductor (conductor is moving) ✓ cutting magnetic field-lines at an angle✓. An EMF will be induced in the conductor. ✓ (3)

8.3 A large DC motor can be started without damaging the motor or motor circuit by inserting resistors in the armature circuit ✓and switching them out as the speed picks up. ✓ (2)

8.4 The return spring does not allow the motor to be started with the full supply voltage across the motor ✓unless the contact arm is forced to remain in the run position.✓

OR
The NCV will release the stinting arm back to the off-position when the power is cut. The motor will have to be manually started again. (2)
[10]

Copyright reserved

QUESTION 9

9.1 Split-phase induction motor, AC series motor, repulsion motor, shaded pole synchronous motor ✓✓ (Any 2 x 1) (2)

9.2 Resistance between windings, resistance between windings and earth, stator coils open and short-circuit tests.✓ ✓ (Any 2 x 1) (2)

9.3 To disconnect the circuit when the current exceeds the design value of the circuit.✓ (1)

9.4 9.4.1 Star-delta starting places a voltage on the stator coils that is $\sqrt{3}$ times smaller than the supply voltage. OR direct-on-line starting places the supply voltage on the stator coils. ✓

9.4.2 In rotor resistance starters there are resistors connected to the rotor coils during starting. ✓

9.4.3 The starting winding of a split-phase motor is placed closer to the rotor of the motor than the running winding. ✓

9.4.4 A centrifugal switch will automatically disengage when the speed becomes too high OR an overload relay will disengage when the current becomes too high. (4 x 1) (4)

9.5 Swap the connection of two of the supply lines to the motor. ✓ (1)
[10]

QUESTION 10

10.1

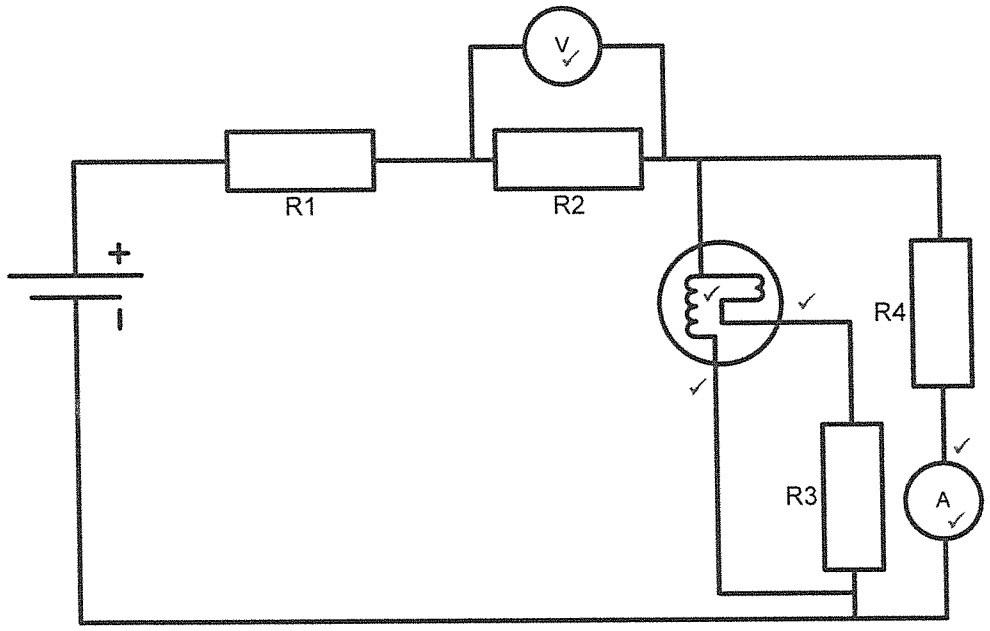

(6)

10.2 Common- base✓, -emitter✓, -collector (2)

10.3 To smoothen the voltage, to store charge that can be used if the voltage drops, etc. ✓ (Any 1) (1)

10.4 To rectify AC✓, stop any reverse voltage. (Any 1) (1)

[10]

TOTAL: 100

Copyright reserved