2013041097

higher education & training

Department:
Higher Education and Training
REPUBLIC OF SOUTH AFRICA

T490(E)(A10)T
APRIL EXAMINATION

NATIONAL CERTIFICATE

ELECTRICAL TRADE THEORY N3

(11041263)

10 April 2013 (X-Paper)
09:00–12:00

This question paper consists of 8 pages and a 1-page formula sheet.

Copyright reserved

DEPARTMENT OF HIGHER EDUCATION AND TRAINING
REPUBLIC OF SOUTH AFRICA

NATIONAL CERTIFICATE
ELECTRICAL TRADE THEORY N3
TIME: 3 HOURS
MARKS: 100

INSTRUCTIONS AND INFORMATION

1. Answer ALL the questions.
2. Read ALL the questions carefully.
3. Number the answers according to the numbering system used in this question paper.
4. Where applicable, answers must be in accordance with the SABS (SANS) Code of Practice, SANS 10142-1:2003 for the Wiring of Premises.
5. Sketches must be neat, labelled and large enough to show the required detail.
6. Answers must be given to TWO decimal places.
7. Write neatly and legibly.

Copyright reserved

QUESTION 1: DOMESTIC APPLIANCES

1.1 Make a simple, labelled sketch of a thermostat suitable for use in a laundry iron. (4)

1.2 Explain how the temperature of a laundry iron is controlled by the above-mentioned thermostat. (3)

1.3 Name the THREE components which make up the tubular element that heats up the laundry iron surface. (3)
[10]

QUESTION 2: PROTECTION

2.1 Miniature circuit breakers (MCB) fall into two categories. Answer the following questions on the thermal magnetic type MCB:

2.1.1 Make a simple, labelled sketch of this MCB that shows its principle of operation. (4)

2.1.2 Explain how the temperature in the bimetal strip of the MCB is responsible for the time delay before tripping. (2)

2.1.3 Explain how the magnetic field inside the iron armature controls the tripping time on short circuit. (2)

2.2 State TWO methods that are used to check if an earth-leakage relay operates correctly. (2)
[10]

Copyright reserved

QUESTION 3: ILLUMINATION

3.1 Use the sketch below to explain the operation of the high-pressure mercury-vapour lamp.

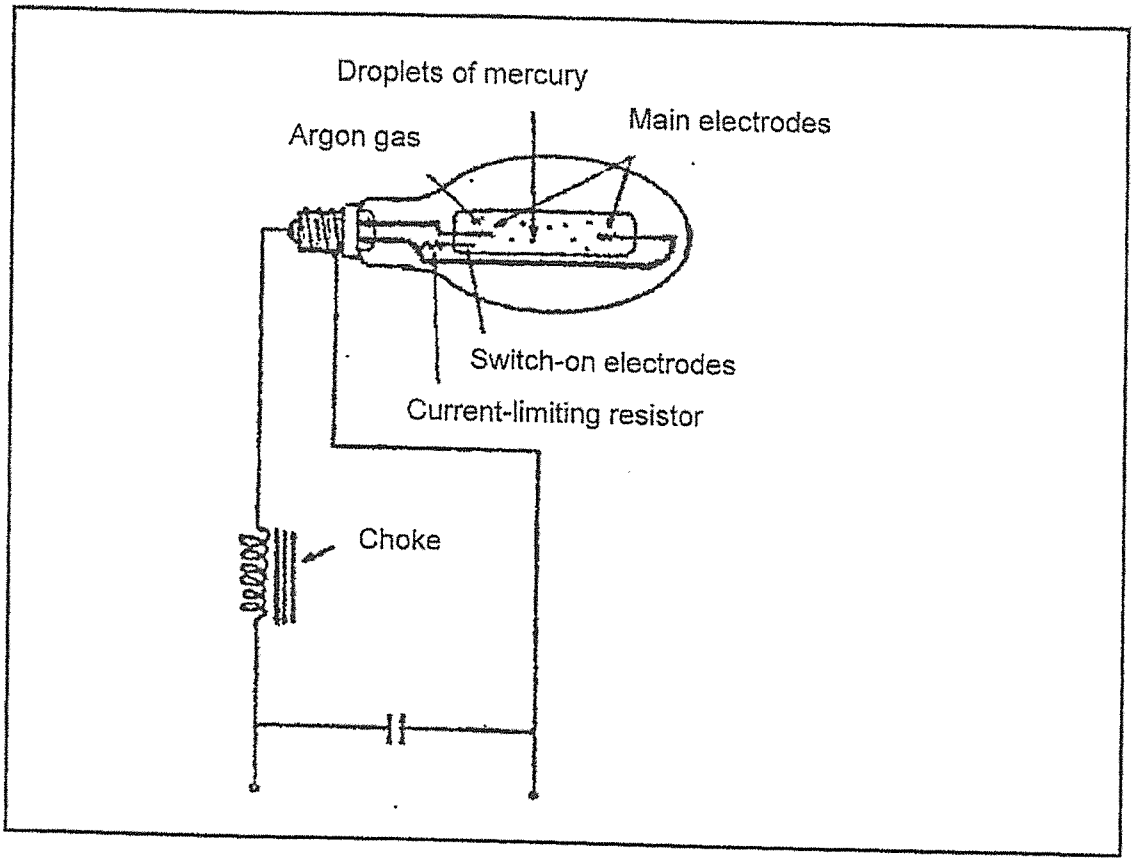

(6)

3.2 Give TWO reasons why high-pressure mercury vapour lamps are preferred to fluorescent lamps. (2)

3.3 Give ONE reason why fluorescent lamps are preferred to incandescent lamps. (1)

3.4 What is the purpose of the capacitor incorporated inside a glow starter? (1)

[10]

Copyright reserved

QUESTION 4: ALTERNATING CURRENT THEORY

4.1 Choose a word or an item from COLUMN B that matches a description in COLUMN A. Write only the letter (A–F) next to the question number (4.1.1–4.1.6) in the ANSWER BOOK.

	COLUMN A		COLUMN B
4.1.1	A sinusoidal reversal of polarity at the output terminals of the power supply	A	frequency
4.1.2	An appliance used to reduce or increase the current needed when welding metals	B	form and crest
4.1.3	Cycles per second in an alternating current circuit	C	phase angle
4.1.4	A measure of the interval between the voltage beginning to rise and the current beginning to rise	D	transformer
4.1.5	The voltage and current values that are used to calculate effective power	E	root mean square
4.1.6	Factors used to determine the shape of an alternating current signal	F	alternating current

(6)

4.2 A waveform is represented by the equation i = 10 sin 360 t (current in amps and angle in radians).

Calculate the following:

4.2.1 The instantaneous value of the current at 20 milliseconds (2)

4.2.2 The effective current (2)

[10]

QUESTION 5: RLC SERIES CIRCUITS

5.1 What is the inductive reactance of a 10 mH coil when connected to a 12 V DC lead-acid battery? (1)

5.2 Explain the difference between *leading* and *lagging power factors.* (2)

Copyright reserved

5.3 A coil of unknown resistance and inductive reactance is connected to a 220 V/50 Hz supply and draws a current of 2 A. The AC supply is disconnected and the same coil is now connected to a 12 V DC supply where it draws 0,2 A.

Calculate the inductance of the coil in millihenry. (7)
[10]

QUESTION 6: THREE-PHASE AC SYSTEMS

6.1 A three-phase 380 V supply delivers 100 A to a balanced star-connected load with a lagging power factor of 0,86.

Calculate the following:

6.1.1 Current in each phase (2)

6.1.2 Voltage across each phase (2)

6.1.3 Total apparent power (2)

6.1.4 Power per phase (2)

6.2 Three-phase motors are cheaper and smaller for the same power rating than single-phase motors.

State TWO other advantages three-phase motors have over single-phase motors. (2)
[10]

QUESTION 7: TRANSFORMERS

A three-phase step-down transformer has a turns ratio of 15 : 1. The primary windings are connected to a 3,3 kV three-phase supply.

7.1 Calculate the secondary line voltage when the transformer is connected in the following way:

7.1.1 Primary in delta and secondary in delta (3)

7.1.2 Primary in delta and secondary in star (3)

7.2 Explain why you cannot use three-phase line values when using the transformer turns ratio formula. (2)

7.3 Instrument transformers give an output limited to the full scale deflection of the measuring instrument. State this maximum output for the potential transformer and the current transformer instrument transformers. (2)
[10]

Copyright reserved

QUESTION 8: DC MACHINES

8.1 Explain how a face-plate starter decreases the starting current to a motor. (1)

8.2 Explain how to change the rotation direction of the following DC motors:

8.2.1 Shunt motors (1)

8.2.2 Compound motors (1)

8.2.3 Interpole motors (1)

8.3 Give a step-by-step explanation of how you can use a DC voltmeter and a low voltage power supply to test the following:

8.3.1 The armature of a DC motor (3)

8.3.2 The field coils of a DC motor (3)
[10]

QUESTION 9: AC MACHINES

9.1 Briefly explain, with or without the aid of simple diagrams, how the starting current is limited in a three-phase squirrel-cage motor using an auto-transformer. (4)

9.2 Name the type of single-phase induction motor most commonly used for:

9.2.1 Small timing devices such as the electric clock at the railway station (1)

9.2.2 Applications that require motors rated between 0,1 kW and 0,25 kW (1)

9.2.3 Electric lawn mowers motors (1 kW) (1)

9.3 State the requirements of the Code of Practice for Motors and Motor Circuits regarding the following:

9.3.1 The circuit conductors of the motor (1)

9.3.2 Over-current protection (1)

9.3.3 No-voltage protection (1)
[10]

Copyright reserved

QUESTION 10: MEASURING INSTRUMENTS AND ELECTRONICS

10.1 By using THREE diodes for rectification, a three-phase four-wire AC supply can be used to give a DC output. Sketch the circuit that will accomplish this. (4)

10.2 Measuring instruments used on DC circuits have selector switches to increase the range of the meter. Explain how the range of the following meters can be changed with a resistor:

10.2.1 A voltmeter (2)

10.2.2 An ammeter (2)

10.3 Which TWO elements are used extensively in the manufacture of semiconductor devices? (2)

[10]

TOTAL: 100

Copyright reserved

FORMULA SHEET

$$I_T = \frac{V}{Z}$$

$$I_{ACTIVE} = I_T \text{ Cos } \phi$$

$$I_{REACTIVE} = I_T \text{ Sin } \phi$$

$$X_L = 2\pi f L$$

$$X_C = \frac{1}{2\pi f C}$$

$$Z = \sqrt{R^2 + (X_L - X_C)^2}$$

$$\phi = \text{Cos}^{-1}\left(\frac{R}{Z}\right)$$

$$V_R = I_T R$$

$$V_{XL} = I_T X_L$$

$$V_{XC} = I_T X_C$$

$$V = \sqrt{V_R{}^2 + (V_{XL} - V_{XC})^2}$$

$$P = I^2 R$$

$$P = \sqrt{3}\ V_L I_L \text{ Cos } \phi$$

$$S = VI$$

$$S = \sqrt{3}\ V_L I_L$$

DELTA

$$V_L = V_{PH/F}$$

$$I_L = \sqrt{3} I_{PH/F}$$

STAR

$$V_L = \sqrt{3} V_{PH/F}$$

$$I_L = I_{PH/F}$$

$$\frac{V_p}{V_s} = \frac{N_p}{N_s} = \frac{I_s}{I_p}$$

$$N = \frac{f.60}{p}$$

$$s = \frac{n - n_r}{n}$$

$$\omega = 2\pi f$$

The next five formulae are also true for voltage

$$i = I_m \text{ Sin } (\omega t)$$

$$I_{rms} = 0{,}707\ I_m$$

$$I_{ave} = 0{,}637\ I_m$$

$$I_{rms} = \sqrt{\frac{i_1{}^2 + i_2{}^2 + \ldots i_n{}^2}{n}}$$

$$I_{ave} = \frac{i_1 + i_2 + .. i_n}{n}$$

$$\text{Form factor} = \frac{\text{RMS value}}{\text{AVE value}}$$

$$\text{Crest factor} = \frac{\text{MAX value}}{\text{RMS value}}$$

SERIES

$$R_T = R_1 + R_2 + \ldots R_n$$

PARALLEL

$$\frac{1}{R_T} = \frac{1}{R_1} + \frac{1}{R_2} + \ldots \frac{1}{R_n}$$

Copyright reserved

higher education & training

Department:
Higher Education and Training
REPUBLIC OF SOUTH AFRICA

MARKING GUIDELINE

NATIONAL CERTIFICATE

APRIL EXAMINATION

ELECTRICAL TRADE THEORY N3

10 APRIL 2013

This marking guideline consists of 7 pages.

Copyright reserved

INSTRUCTIONS AND INFORMATION

NOTE: There is not only one answer or one method (approach) of answering the questions. This memorandum gives only one answer or one possible method (approach). Examiners must analyse the student's solution to determine if the question has been answered and must not adhere strictly to this memorandum.

QUESTION 1: DOMESTIC APPLIANCES

1.1

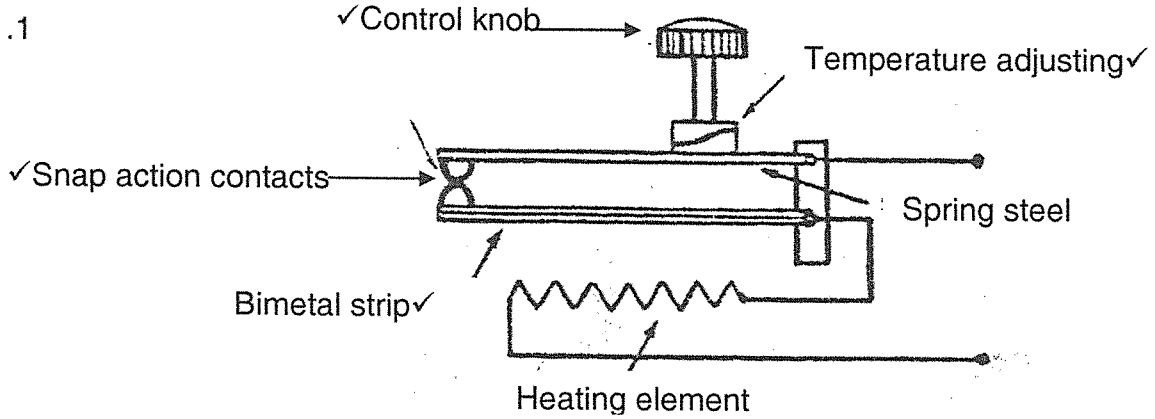

(4)

1.2 The same current flows through the element, bimetal strip and contacts. ✓ When bimetal strip is hot it bends ✓and will have to bend even more when the control knob is turned to a higher heat setting. ✓

[Any THREE facts] (3)

1.3 A nichrome wire✓ insulated from the metal tube✓ by magnesium oxide. ✓ (3)

[10]

QUESTION 2: PROTECTION

2.1 2.1.1

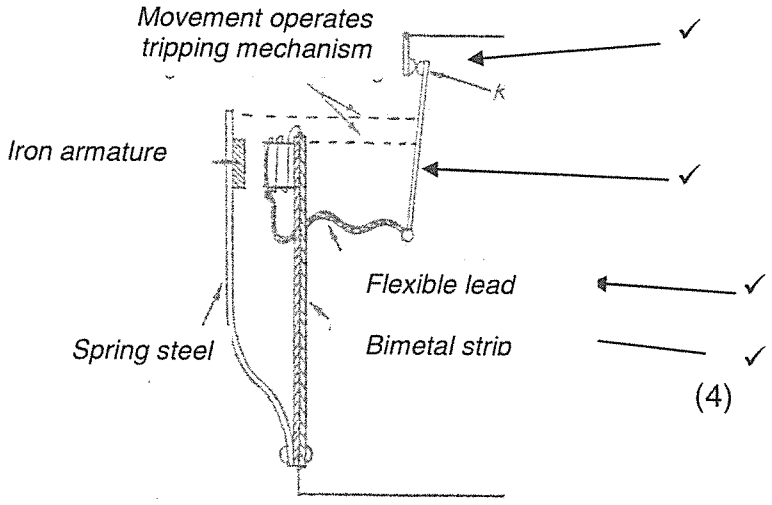

(4)

2.1.2 The bimetal strip is heated by the load current and bends slowly towards the iron armature. ✓ The higher the current the quicker it bends. ✓

(2)

Copyright reserved

2.1.3 Magnetic field is large when current is high✓ and this attracts the iron armature even through the air gap. ✓ (2)

2.2 Use the earth leakage relay test button ✓or simulate an earth fault at any outlet point. ✓ (2)
[10]

QUESTION 3: ILLUMINATION

3.1 When the lamp circuit is switched on, a discharge takes place✓ between the main and starting electrode ✓through the argon gas. ✓ The heat from this discharge vaporises the mercury✓ and discharge takes place between the two main electrodes. ✓ After up to 5 minutes the lamp is fully on. Current is limited by the choke. When switched off the lamp cools down but will not allow a discharge until the argon gas pressure has fallen enough.
[Any SIX facts] (6)

3.2 High-pressure mercury vapour lamps last longer. ✓ (2)

3.3 Fluorescent lamps are more energy efficient. ✓ (1)

3.4 The capacitor incorporated inside a glow starter suppresses high frequency noise. ✓ (1)
[10]

QUESTION 4: ALTERNATING CURRENT THEORY

4.1 4.1.1 F✓

4.1.2 D✓

4.1.3 A✓

4.1.4 C✓

4.1.5 E✓

4.1.6 B✓ (6)

4.2 4.2.1 Given t = 20 milliseconds
i = 10 sin 360t
= 10 sin(360 x 0,02) ✓
= 7,94 A✓ Calculator must be in radians (2)

4.2.2 The effective current = I_{RMS} = 0,707. I_{max} ✓
= 5,61 A ✓ (2)
[10]

Copyright reserved

QUESTION 5: RLC SERIES CIRCUITS

5.1 L = 10 mH V = 12 V DC
thus f = 0 and $X_L = 2.\pi.f.L = 0\ \Omega$ ✓ (1)

5.2 In a leading power factor the current leads ✓ the voltage by 90°
In a lagging power factor the current lags ✓ the voltage by 90° (2)

5.3 Connected to AC
R = ?,
X_L = ?,
V_{ac} = 220 V,
f = 50 Hz and
I_{ac} = 2 A

Connected to DC
V_{dc} = 12 V,
f = 0 Hz and
I_{dc} = 0,2 A

For DC circuits, the current is only limited by the resistance.

$$R = \frac{Vdc}{Idc}$$
$$= \frac{12}{0,2}\ \checkmark$$
$$= 60\ \Omega\ \checkmark$$

For AC

$$Z = \frac{Vac}{I}\ \checkmark$$
$$= \frac{220}{2}$$
$$= 110\ \Omega\ \checkmark$$

$$Z2 = X2 + R2\ \checkmark$$
$$X = 92,2\ ohm\ \checkmark$$
$$X = 2.\pi.f.L$$
$$L = 92,2/(2.\pi.50)$$
$$= 293\ mH\ \checkmark$$

(7)
[10]

QUESTION 6: THREE-PHASE AC SYSTEMS

6.1 6.1.1 Current in each phase = $I_{ph} = I_L$ ✓
= 100 A ✓ (2)

6.1.2 Voltage across each phase = Vph = $V_L \div \sqrt{3}$ ✓
= 380 / 1,732
= 219,39 V ✓ (2)

Copyright reserved

6.1.3 Total apparent power = $S_T = \sqrt{3} .V_L.I_L$ ✓
= 1,732x380x100
= 65,82 kVA ✓ (2)

6.1.4 Power per phase $P_{ph} = (S_T \times \cos ø) \div 3$ ✓
= 18,87 kW ✓ (2)

6.2 Three-phase motors are more efficient, ✓ operate at a better power factor✓ and are self-starting. (2)
[10]

QUESTION 7: TRANSFORMERS

7.1 7.1.1 Given
V_{LineP} = 3 300 V and
$N_{primary} \div N_S = 15$

Primary in delta and secondary in delta then
$V_{LineP} = V_{PhP}$ and
$V_{LineS} = V_{PhS}$

$$\frac{N_{primary}}{N_{Sscondary}} = \frac{V_{PhP}}{V_{PhS}}$$
$$15 = \frac{3\ 300}{VPhS} \quad thus$$
$$VPhS = 220\,V \checkmark$$
$$VLineS = VPhS \checkmark thus\ VLineS = 220\,V \checkmark$$

(3)

7.1.2 Primary in delta and secondary in star.
$V_{LP} = V_{PP}$ and
$V_{LS} = \sqrt{3}\ V_{PS}$

$$15 = \frac{3\ 300}{VPhS} \quad thus$$
$$VPhS = 220\,V \checkmark$$
$$VLineS = \sqrt{3}VPhS\ thus$$
$$VLineS = \sqrt{3}x220\,V = 381 \checkmark V \checkmark$$

(3)

7.2 You cannot use three-phase line values when using the transformer turns ratio formula because the total volts per turn✓ = phase voltage. ✓ (2)

7.3 The maximum output for the potential transformer = 110 V ✓and the current transformer = 5 A ✓ (2)
[10]

Copyright reserved

QUESTION 8: DC MACHINES

8.1 A face-plate starter decreases the current to the motor by adding resistance in series✓ in the motor circuit. (1)

8.2 8.2.1 Change the field coil or change the armature coil around. ✓ (1)

8.2.2 Change both the field coils around or change the armature coil around. ✓ (1)

8.2.3 Change only the main field coils (shunt) around. ✓ (1)

8.3 8.3.1 Connect a low-voltage power supply to the two commutator segments one pole pitch apart. ✓
Connect a DC voltmeter to two adjacent commutator segments and take the reading. ✓
Proceed to the next two adjacent commutator segments and take the reading. All readings should be the same. ✓ (3)

8.3.2 Connect a low-voltage power supply across the series-connected ✓field coils.
Connect a DC voltmeter across one field coil at a time and take the readings. ✓ All readings should be the same. ✓ (3)
[10]

QUESTION 9: AC MACHINES

9.1 The auto-transformer starter consists of three single-phase auto-transformers. The tapping connected to the stator coil ✓of the squirrel-cage motor is in series with the supply. ✓
At start-up the voltage across the stator coils is reduced by the volt-drop across the tapping. ✓
At a certain speed the transformer is cut out of the circuit. ✓ (4)

9.2 9.2.1 Shaded pole motor ✓ (1)

9.2.2 Resistance-start split-phase motor ✓ (1)

9.2.3 Capacitance-start split-phase motor ✓ (1)

9.3 9.3.1 The circuit conductors of the motor must have a current-carrying capacity of at least the motor's full load current (rating). ✓ (1)

9.3.2 The tripping current of the over-current protection must be lower than the current-carrying capacity of the circuit conductors. ✓ (1)

9.3.3 No-voltage protection should disconnect the motor from the supply in such a way that it cannot restart by itself. ✓ (1)
[10]

Copyright reserved

QUESTION 10: MEASURING INSTRUMENTS AND ELECTRONICS

10.1 ✓supply

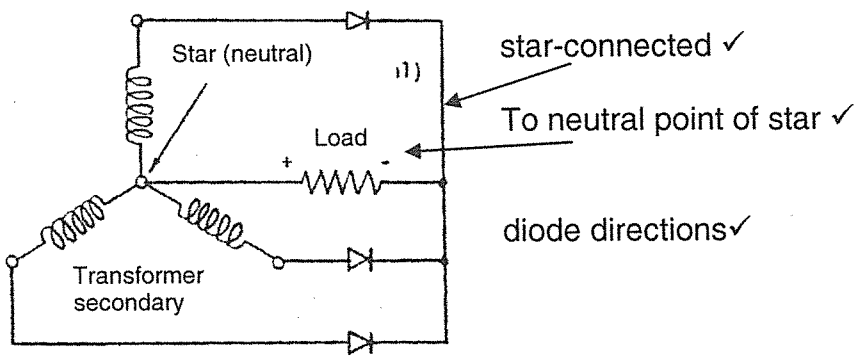

(4)

10.2 10.2.1 A voltmeter's range can be increased by adding a series resistor✓ to the circuit. The volt-drop across the series resistor must prevent the voltage across the meter to exceed its rating. ✓ (2)

10.2.2 An ammeter's range can be increased by adding a shunt resistor✓ to the circuit. The current through the shunt resistor must prevent the current through the meter to exceed its rating. ✓ (2)

10.3 Silicon ✓and germanium✓ (Also correct if doping elements are mentioned) (2)
[10]

TOTAL: 100

Copyright reserved