higher education & training

Department:
Higher Education and Training
REPUBLIC OF SOUTH AFRICA

MARKING GUIDELINE

NATIONAL CERTIFICATE

NOVEMBER EXAMINATION

DIGITAL ELECTRONICS N5

25 NOVEMBER 2016

This marking guideline consists of 7 pages.

Copyright reserved

QUESTION 1

1.1 C
1.2 A
1.3 B
1.4 B
1.5 C
1.6 D
1.7 A
1.8 B
1.9 B
1.10 D

(10 × 1) **[10]**

QUESTION 2

2.1 STEP 1 1: Let number of bits in minuend = No. bits in subtrahend✓
i.e. $1011110{,}0111_2 - 0010110{,}1010_2$

STEP 2 and 3: Add minuend + (complement subtrahend + 1)

	1	0	1	1	1	1	0,	0	1	1	1	✓
	1	1	0	1	0	0	1,	0	1	0	1	
										+	1	
1	1	0	0	0	1	1	1,	1	1	0	1	✓

IGNORE CARRY ✓

STEP 4: ANSWER :

+	1	0	0	0	1	1	1,	1	1	0	1	✓

Answer = $107{,}68_{\ 8}$ ✓ (6)

2.2 $5E{,}7_{16} = 101110{,}0111_2$ $3{,}75_{10} = 11{,}11_2$ ✓

			1	0	1	1	1	1	0	0	1	1	1	
										1	1	1	1	✓
			1	0	1	1	1	1	0	0	1	1	1	
		1	0	1	1	1	1	0	0	1	1	1	0	✓
	1	0	1	1	1	1	0	0	1	1	1	0	0	
1	0	1	1	1	1	0	0	1	1	1	0	0	0	✓
1	0	1	1	0	0	0	1	0,	0	0	1	0	0	1

✓

TO OCT: = $162{,}24_{16}$ ✓
(6)

(6)

2.3 B x C = $010110{,}101_2$ ÷ $11{,}11_2$ (move 2 spaces)

```
                          1  1  0,  0  0  0   ✓
10111   ✓   ) 1  0  1  1  0  1  0  1  0  0
              1  1  1  1                      ✓
                 1  1  1  1                   ✓
                 1  1  1  1
                          0  1  0  0          ✓
```

100_2 = 6_{10} ✓ (6)

[18]

QUESTION 3

3.1

Dec	INPUTS				0/P
	A	B	C	D	F
0	0	0	0	0	
1	0	0	0	1	1
2	0	0	1	0	
3	0	0	1	1	1
4	0	1	0	0	
5	0	1	0	1	1
6	0	1	1	0	1
7	0	1	1	1	1
8	1	0	0	0	1
9	1	0	0	1	1
10	1	0	1	0	1
11	1	0	1	1	1
12	1	1	0	0	
13	1	1	0	1	
14	1	1	1	0	1
15	1	1	1	1	1

$$F = \overline{\overline{A}\,D + BC + A\overline{B}}$$ ✓

$$= \overline{\overline{AD} + BC + A\overline{B}}$$ ✓

$$= \overline{\overline{AD}} \,.\, \overline{BC} \,.\, \overline{A\overline{B}}$$ ✓

AB \ CD	00	01	11	10
00		1	1	
01		1	1	1
			1	1
10	1	1	1	1

✓ ✓ ✓

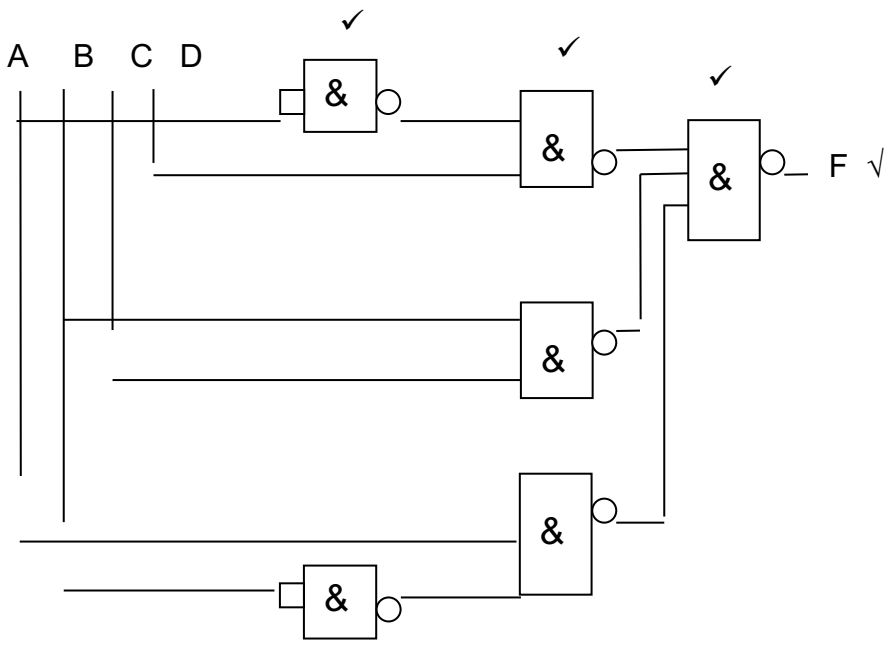

(12)

3.2 $M = X.Y + X.Y + X.Y$ ✓

$= \overline{X}.Y + X.\overline{Y} + \overline{X} + \overline{Y}$ ✓

$= \overline{X} + \overline{X}.Y + \overline{Y} + X.\overline{Y}$

$= X(1+Y) + \overline{Y}(1+X)$

$= X + \overline{Y}$ ✓

$= \overline{\overline{X}.Y}$ ✓

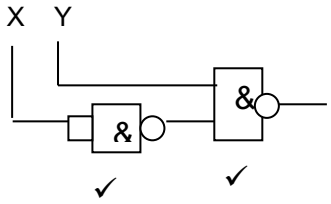

✓ ✓

(6)
[18]

QUESTION 4

4.1

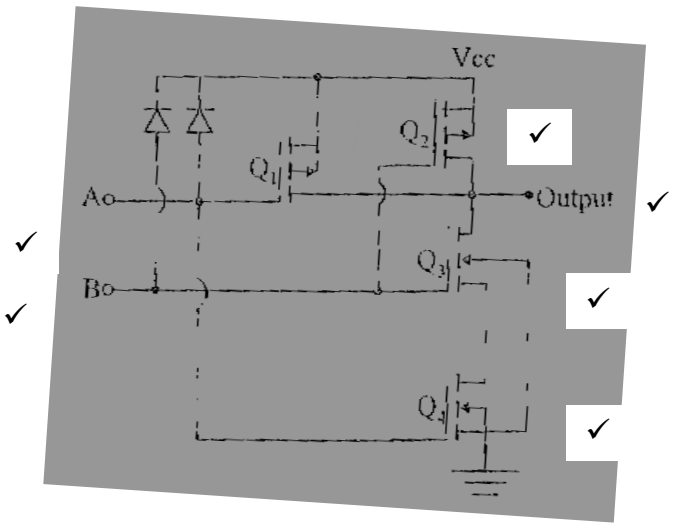

✓ ✓ ✓ ✓ ✓ ✓

(6)

4.2

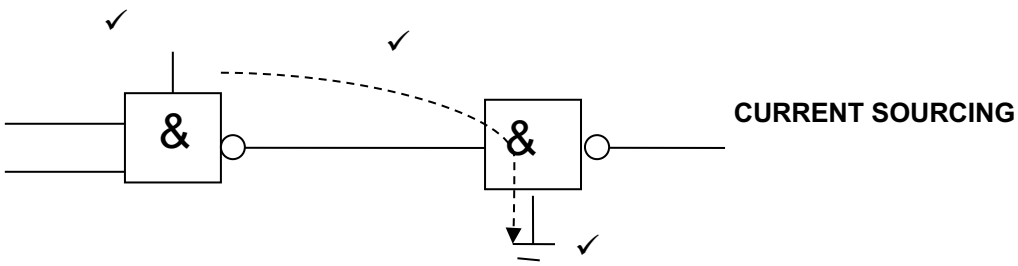

Current Sinking: when a current path exists from the load gate supply (gate 2) to the output of the driving gate (Gate 1) and ground.

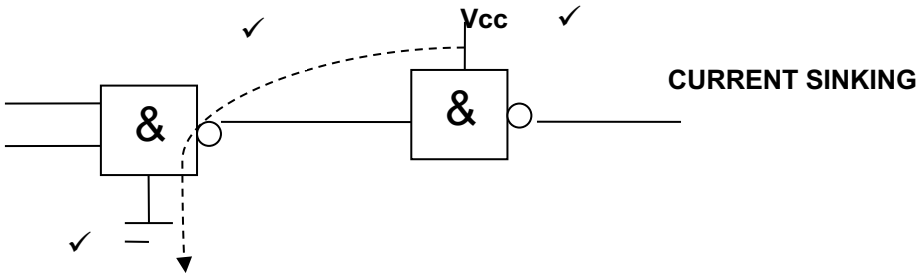

(6)

4.3

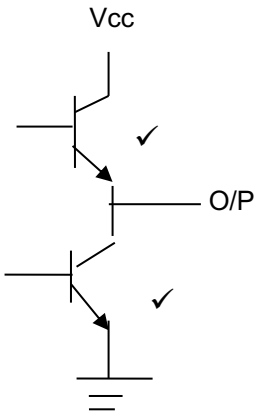

used to increase switching speed and lower output impedance ✓

(4)

4.4 Higher switching speed✓✓ (2)

[18]

QUESTION 5

5.1 Vo = (N x Vin x t) / RC = (3500 x 2 x 1 ms)/100k x 100uF✓
= 0,7 V✓ (2)

5.2

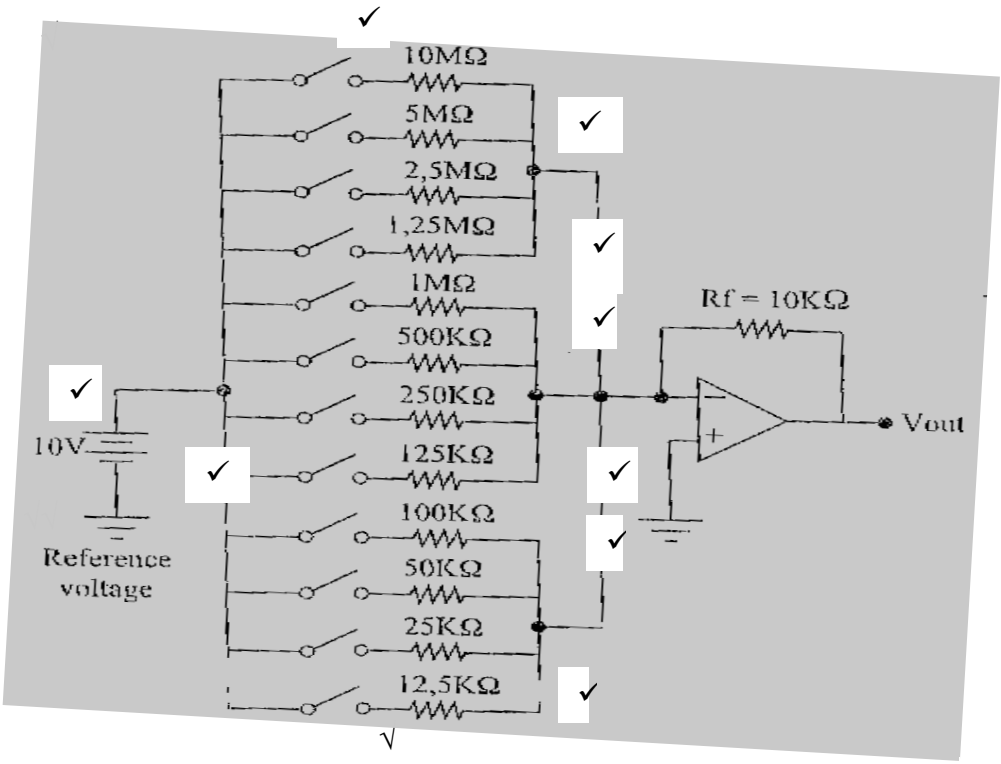

(10)

5.3 The inkjet printer uses the application of charges on deflection plates, while a thermal printer converts electricity to heat. In an inkjet printer, the ink droplets are charged as they pass through the deflection plates, to form characters on paper, while in a thermal printer, heat is applied onto paper via writing nibs, burning an image onto special paper, producing the character image.
(6 underlined phrases will guide marking) (2 × 3) (6)
[18]

QUESTION 6

6.1 A ferrite core functions as a magnet. A wire passes through the core.✓ If the direction of the magnetic flux in the core and the direction of the current in the wire reinforce each other, a logic 1 is stored.✓ If either the flux or magnet opposes each other, a logic 0 is stored.✓ (3)

6.2

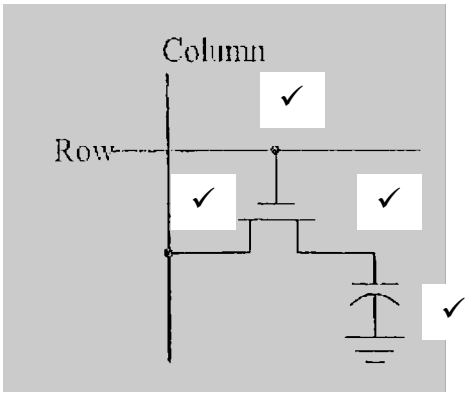

The dynamic ram cell requires refreshing to retain data – additional circuitry ensures refreshing.✓ (5)

6.3

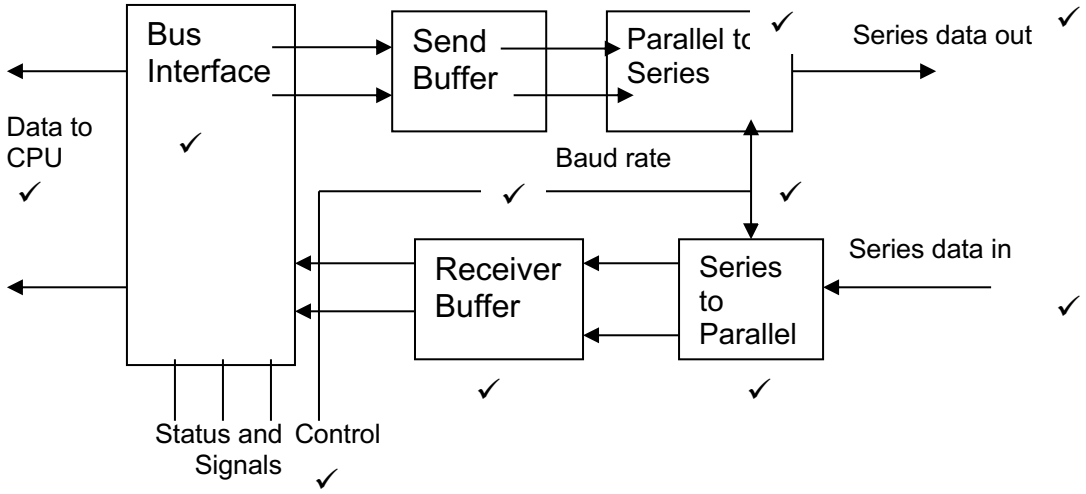

(10)
[18]

TOTAL: 100

Copyright reserved