higher education & training

Department:
Higher Education and Training
REPUBLIC OF SOUTH AFRICA

MARKING GUIDELINE

NATIONAL CERTIFICATE

DIGITAL ELECTRONICS N5

5 August 2021

This marking guideline consists of 6 pages.

Copyright reserved

QUESTION 1

1.1	B
1.2	C
1.3	B
1.4	C
1.5	B
1.6	C
1.7	D
1.8	B
1.9	B
1.10	A

(10 × 1) **[10]**

QUESTION 2

2.1 $74,75_{10} = 1\ 0\ 0\ 1\ 0\ 1\ 0,\ 1\ 1_2$✓
$132,4_8 = 1\ 0\ 1\ 1\ 0\ 1\ 0,\ 1_2$✓

							1	0	0	1	0	1	0	1	1	
								1	0	1	1	0	1	0	1	×
							1	0	0	1	0	1	0	1	1	
					1	0	0	1	0	1	0	1	1	0		
			1	0	0	1	0	1	0	1	1	0				
		1	0	0	1	0	1	0	1	1						✓
1	0	0	1	0	1	0	1	1	0							+
1	1	0	1	0	0	1	1	0	1	1	0	0,	1	1	1	✓✓

Answer: 1 1 0 1 0 0 1 1 0 1 1 0 0, 1 1 1_2 = 1 A 6 C, E_{16}✓

(6)

2.2 $3D0,4_{16} = 1\ 1\ 1\ 1\ 0\ 1\ 0\ 0\ 0\ 0,\ 0\ 1_2$✓
$11,6_8 = 1\ 0\ 0\ 1,\ 1\ 1_2$✓

										1	1	0	0	1	0	0,	0	0	1	✓
1	0	0	1	1	1	1	1	1	1	0	1	0	0	0	0	0	1,	0	0	0	
						1	0	0	1	1	1	-									
						0	1	0	1	1	0	0									
							1	0	0	1	1	1	-								
							0	0	0	1	0	1	0	0	0						✓
										1	0	0	1	1	1	-					
										0	0	0	0	0	1	0	1	0	0	0	
															1	0	0	1	1	1	-
															0	0	0	0	0	1	

Answer: 1 1 0 0 1 0 0 , 0 0 1_2 = 1 4 4,
1_8✓

(6)

2.3 $122,75_{10} = 1\ 1\ 1\ 1\ 0\ 1\ 0,\ 1\ 1_2$✓
$12E,C_{16} = 1\ 0\ 0\ 1\ 0\ 1\ 1\ 1\ 0,\ 1\ 1_2$✓

	~~0~~	0	1	1	1	1	0	1	0,	1	1	
	1	0	0	1	0	1	1	1	0,	1	1	-
2's complement	0	1	1	0	1	0	0	0	1,	0	1	✓
	~~0~~	0	1	1	1	1	0	1	0,	1	1	+
No complement	1	0	1	0	0	1	1	0	0,	0	0	✓
2's complement -	0	1	0	1	1	0	1	0	0,	0	0	✓

Answer: - 1 0 1 1 0 1 0 0_2 = -1 8 0_{10}✓

(6)
[18]

QUESTION 3

3.1

	$\bar{A}\,\bar{B}$	$\bar{A}\,B$	$A\,B$	$A\,\bar{B}$
$\bar{C}\,\bar{D}$		1		
$\bar{C}\,D$		1	1	1
$C\,D$ ✓	1	1	1	
$C\,\bar{D}$			1	

OR
✓

	$\bar{C}\,\bar{D}$	$\bar{C}\,D$	$C\,D$	$C\,\bar{D}$
$\bar{A}\,\bar{B}$			1	
$\bar{A}\,B$	1	1	1	
$A\,B$		1	1	1
$A\,\bar{B}$		1		

$F_{ABCD} = \bar{A}\,B\,\bar{C} + A\,B\,C + A\,\bar{C}\,D + \bar{A}\,C\,D$✓✓✓✓

$= \overline{\bar{A}\,B\,\bar{C} + A\,B\,C + A\,\bar{C}\,D + \bar{A}\,C\,D}$ ✓

$= \overline{\bar{A}\,B\,\bar{C}\ .\ \overline{A\,B\,C}\ .\ \overline{A\,\bar{C}\,D}\ .\ \overline{\bar{A}\,C\,D}}$ ✓

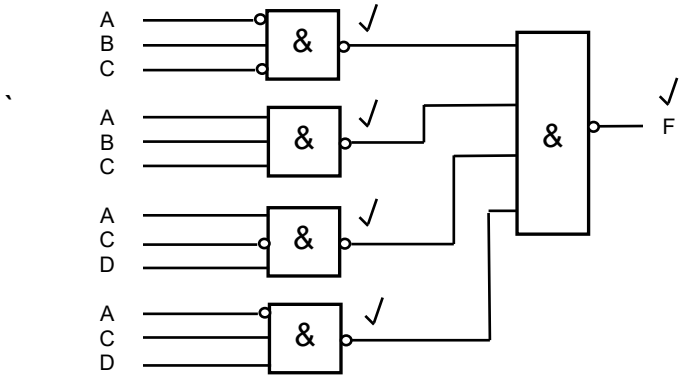

Note: To create an inverted input, the inputs of a two-input NAND gate should be connected together. The inverter shown by these inputs is purely to make the drawing simpler. (12)

3.2 F (A,B,C) = ∑ m (1;2;4;7)

$F = \bar{A}\,\bar{B}\,C + \bar{A}\,B\,\bar{C} + A\,\bar{B}\,\bar{C} + A\,B\,C$✓
$F = \bar{A}\,(\bar{B}\,C + B\,\bar{C}) + A(\bar{B}\,\bar{C} + B\,C)$✓
$F = \bar{A}\,(B \oplus C) + A\,(\overline{B \oplus C})$✓
$F = A \oplus B \oplus C$✓

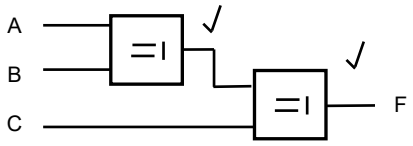

(6)
[18]

QUESTION 4

4.1 4.1.1
- 5400 series between -55° and +125°
- 7400 series between 0° and 70° (2 × 2) (4)

4.1.2 Military use (1)

4.1.3
- 5400 series between 4,5 V and 5,5 V
- 7400 series between 4,75 V and 5,25 V (2 × 2) (4)

4.1.4 Industrial use (1)

4.2 4.2.1 74L00

4.2.2 74S00 (2 × 1) (2)

4.3 4.3.1 Enhancement mode type and the depletion-enhancement mode type (2)

4.3.2 Enhancement mode type (1)

4.3.3 N-MOS and P-MOS (2)

4.3.4

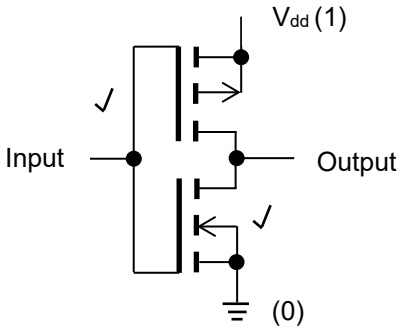

(2)
[19]

QUESTION 5

5.1 Primary✓ and secondary✓ memory (2)

5.2 Primary memory – RAM and ROM✓

Secondary memory – Hard drive, CD ROM, floppy disk, stiffy disk, paper tape, punch card, memory stick, etc.✓
(Any ONE for primary and any ONE for secondary) (2)

5.3 ROM (1)

5.4 Encoding,✓ storage✓ and retrieval✓ (3)

5.5
- SRAM is an on-chip memory, while DRAM is an off-chip memory.
- SRAM access time is small, while DRAM has a large access time.
- SRAM is faster than DRAM. (Any 1 × 2) (2)

[10]

QUESTION 6

6.1 DAC, any one of: binary weighted resistor ladder, three-digit BCD to analogue, R/2R ladder or serial fed.✓

ADC, any one of: voltage frequency converter, parallel comparator, simultaneous or flash, single ramp or slope, dual slope or successive approximation.✓ (2)

6.2

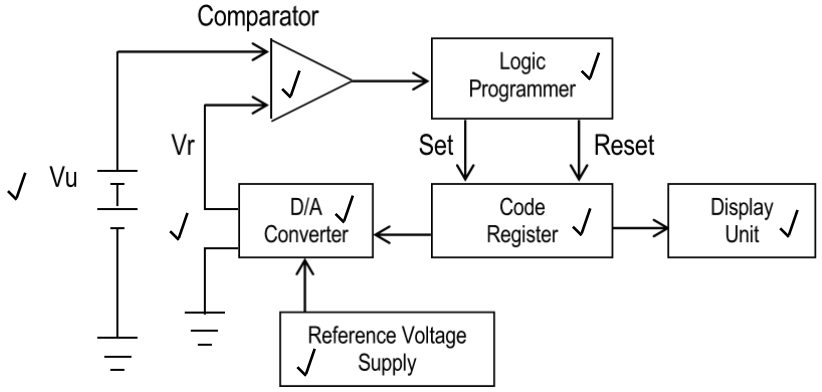

(Award the mark for each unit ONLY if the connections to and/or from each unit is correct.) (8)

6.3 High speed with excellent resolution. (1)

[11]

QUESTION 7

7.1

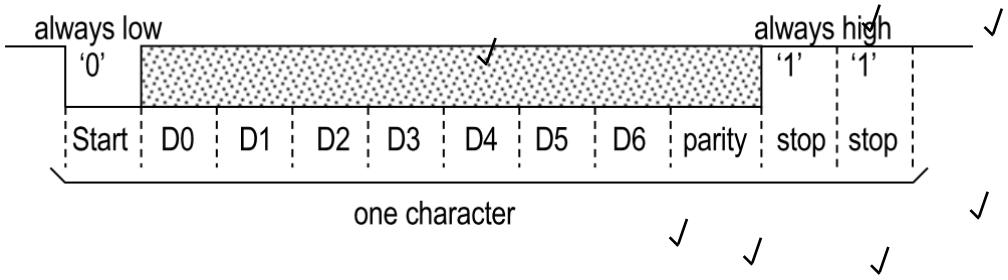

ONE mark for each of the following: always low, start, always high, stop, parity.
TWO marks for data bits D0 to D6. (7)

7.2 The rate at which bits are sent. (1)
[8]

QUESTION 8

Impact		Non-impact
No electromechanical device		Electromechanical device
Printing is done by hammering a set of metal pins or a character set		It prints by depositing ink in any form
Multiple copies can be created		Hard to produce multiple copies
Operation produces noise		Works silently
Slow		Fast

(Award THREE marks for impact and THREE marks for non-impact.) **[6]**

TOTAL: 100

Copyright reserved