higher education & training

Department:
Higher Education and Training
REPUBLIC OF SOUTH AFRICA

MARKING GUIDELINE

NATIONAL CERTIFICATE

DIGITAL ELECTRONICS N5

1 AUGUST 2018

This marking guideline consists of 11 pages.

QUESTION 1

1.1 $21,5_{10}$ – $A1,C_{16}$

2^4	2^3	2^2	2^1	2^0	2^{-1}
1	0	1	0	**1**	**1**

$21,5_{10} = 10101,1_2$

$A1,C_{16} = 1010\ 0001,\ 1100_2 = 10100001,11_2$✓

$21,5_{10}$ - $A1,C_{16}$ = $10101,1_2$ - $10100001,11_2$✓

00010101,10 ⟶ 00010101,10
10100001,11 ⟶ 01011110,00+1✓ ⟶ 01011110,01
No carrey 01110011,11✓

Therefore the answer is negative

10001100,00
Add 1 from LSB +1
complement 100001100,01
–10001100,01✓

For Octal grouping – 010 001 100, 010

Therefore $10101,1_2$ - $10100001,11_2$ = $-214,2_8$ ✓ (6)

1.2 $11,\ 2_8 \times 10,2_{10}$

$11,\ 2_8 = 001\ 001,1100 = 1001,01_2$ ✓ [each octal no. is represented by 3 binary bits]

2^3	2^2	2^1	2^0	2^{-1}	2^{-2}	2^{-3}
1	0	1	0	0	0	1

$10,2_{10} = 1010,001_2$✓

100101
✓ 1010001
100101
✓ 10100010000
+1010001000000
✓ 101110110101

Shift comma in 5 places 1011101,10101
Therefore $1001,01_2$ x $1010,001_2$ = 1011101,10101
(truncated to 3 radix places) = $1011101,101_2$
(for hex group binary in groups of 4) = $0101\ 1101,1010_2$✓ (6)

1.3 $A4,C_{16}$ = 001 011 010,101_2 [each hex no is represented by 4 binary bits]
= 10100100,1100_2
=10100100,11_2 ✓

2^6	2^5	2^4	2^3	2^2	2^1	2^0	2^{-1}
1	1	1	1	0	1	1	1

$123,5_{10}$ = 1111011,1_2✓

10100100,11_2 ÷ 1111011,1_2
10100100,11_2 ÷ 1111011,10_2
1010010011 ÷ 1111011,1

```
              1,010
111101110√1010010011,00
          - 111101110
            10100101,00
          - 100001101
              10100101,00
             -111101110   ✓✓
               10100100
```

10100100,11_2 ÷ 1111011,1_2 = 1,010_2 rem $\frac{101001100}{111101110}$✓

Therefore 1,010_2 = 1,2_8✓ (6)
[18]

QUESTION 2

2.1 1010 = 1111

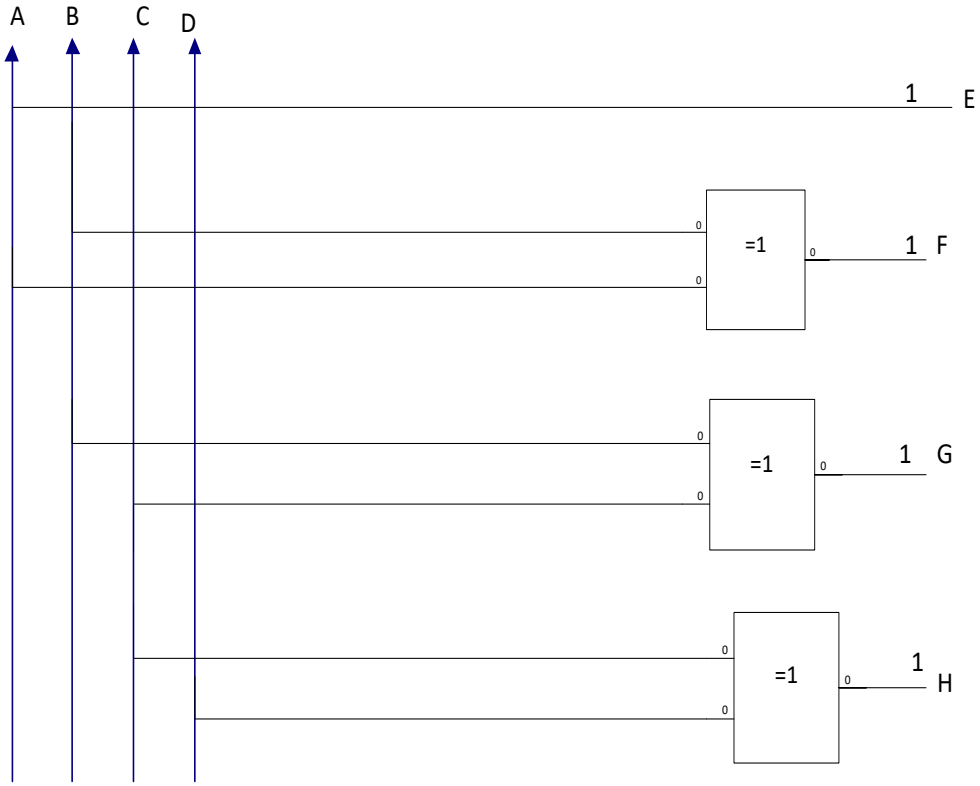

(5)

2.2

A	**B**	**C**	**D**		**F_1**	**F_2**	**F_3**	**F_4**
0	0	0	0		1	1	0	0
0	0	0	1		0	0	1	0
0	0	1	0		1	0	1	0
0	0	1	1		0	1	1	0
0	1	0	0		1	1	1	0
0	1	0	1		0	0	0	1
0	1	1	0		1	0	0	1
0	1	1	1		0	1	0	1
1	0	0	0		1	1	0	1
1	0	0	1		0	0	1	1
1	0	1	0		d	d	d	d
1	0	1	1		d	d	d	d
1	1	0	0		d	d	d	d
1	1	0	1		d	d	d	d
1	1	1	0		d	d	d	d
1	1	1	1		d	d	d	d

	$\overline{A}\,\overline{B}$	$\overline{A}B$	AB	$A\overline{B}$
$\overline{C}\,\overline{D}$	1	1	d	1
$\overline{C}\,D$	0	0	d	0
CD	0	0	d	d
$C\overline{D}$	1	1	d	d

$F_1 = \overline{D}$

	$\overline{A}\,\overline{B}$	$\overline{A}B$	AB	$A\overline{B}$
$\overline{C}\,\overline{D}$	1	1	d	1
$\overline{C}\,D$	0	0	d	0
CD	1	1	d	d
$C\overline{D}$	0	0	d	d

$F_2 = \overline{C}\,\overline{D} + CD$

	$\overline{A}\,\overline{B}$	$\overline{A}B$	AB	$A\overline{B}$
$\overline{C}\,\overline{D}$	0	1	d	0
$\overline{C}\,D$	1	0	d	1
CD	1	0	d	d
$C\overline{D}$	1	0	d	d

$F_3 = B\overline{C}\,\overline{D} + AD$

	$\overline{A}\,\overline{B}$	$\overline{A}B$	AB	$A\overline{B}$
$\overline{C}\,\overline{D}$	0	0	d	1
$\overline{C}\,D$	0	1	d	1
CD	0	1	d	d
$C\overline{D}$	0	1	d	d

$F_4 = A + BD + BC$

Copyright reserved

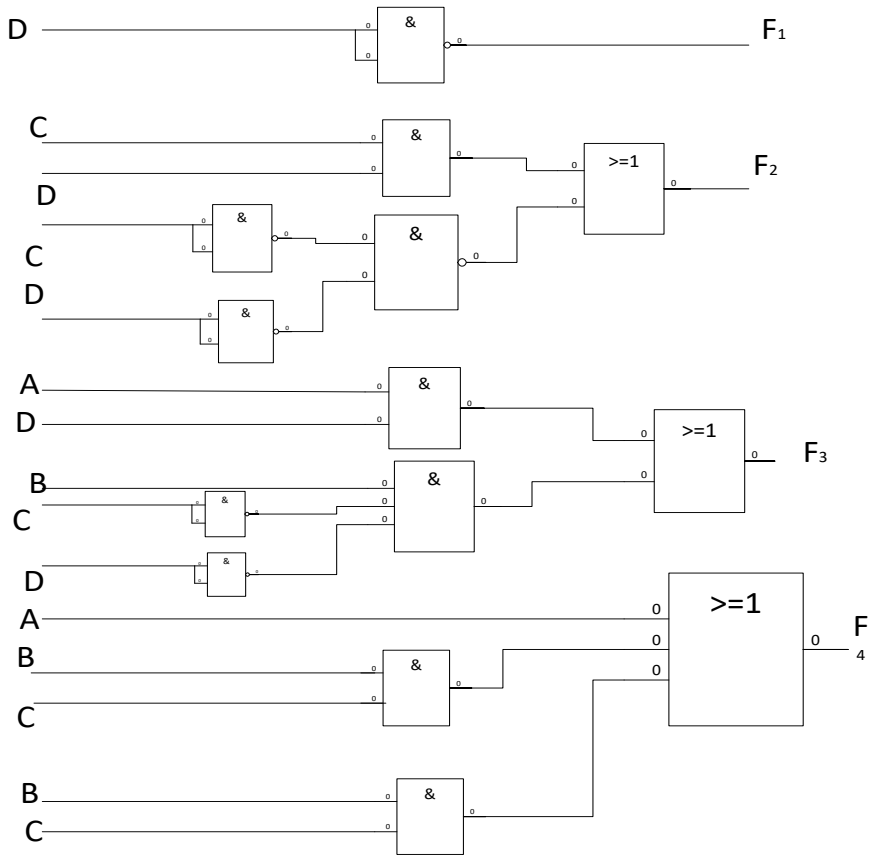

(19)
[24]

QUESTION 3

3.1 3.1.1 Maximum voltage a TTL circuit can withstand without a false change in the output.

3.1.2 Time elapse between an input and an output change.

3.1.3 Gates must drive other logics gates. Fan-in is the number of output stages which can be connected to a single input

(3 × 2) (6)

3.2

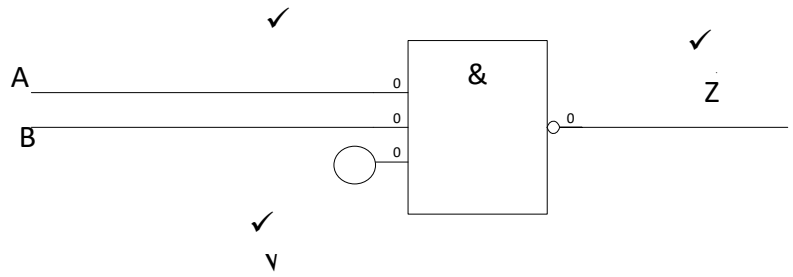

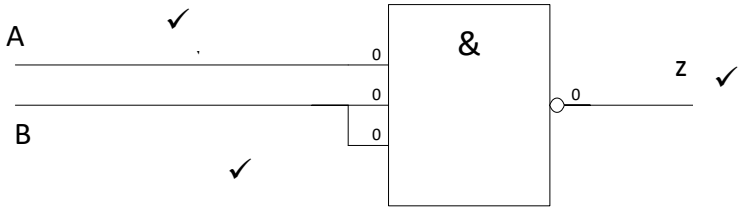

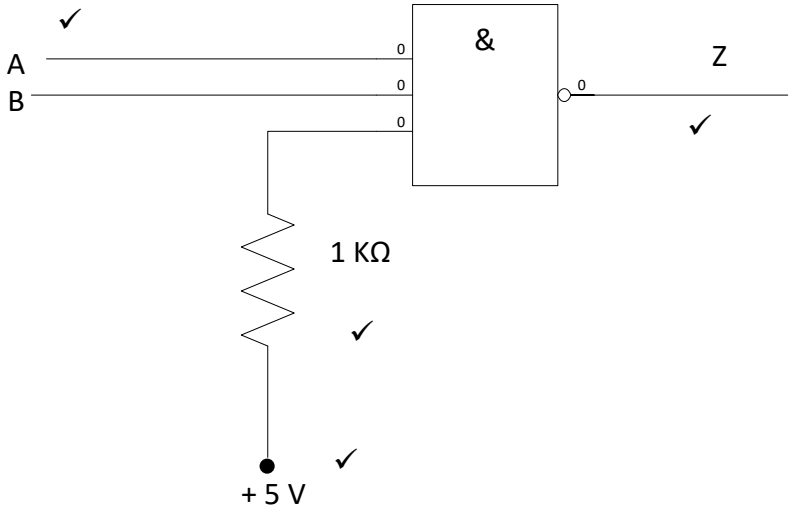

(9)
[15]

QUESTION 4

4.1 4.1.1

- RAM (random access memory) can be read from and written to (i.e the contents can be changed).
- ROM (read-only memory) can only be read from (its contents are permanently programmed in by the manufacturer).

4.1.2

- EPROM (Erasable programmable read-only memory) is erased using ultra-violet light before being rewritten.
- EEPROM (electrically erasable programmable read-only memory) is erased electrically before being rewritten. (it can be erased while still in the circuit).

(2 × 4) (8)

4.2

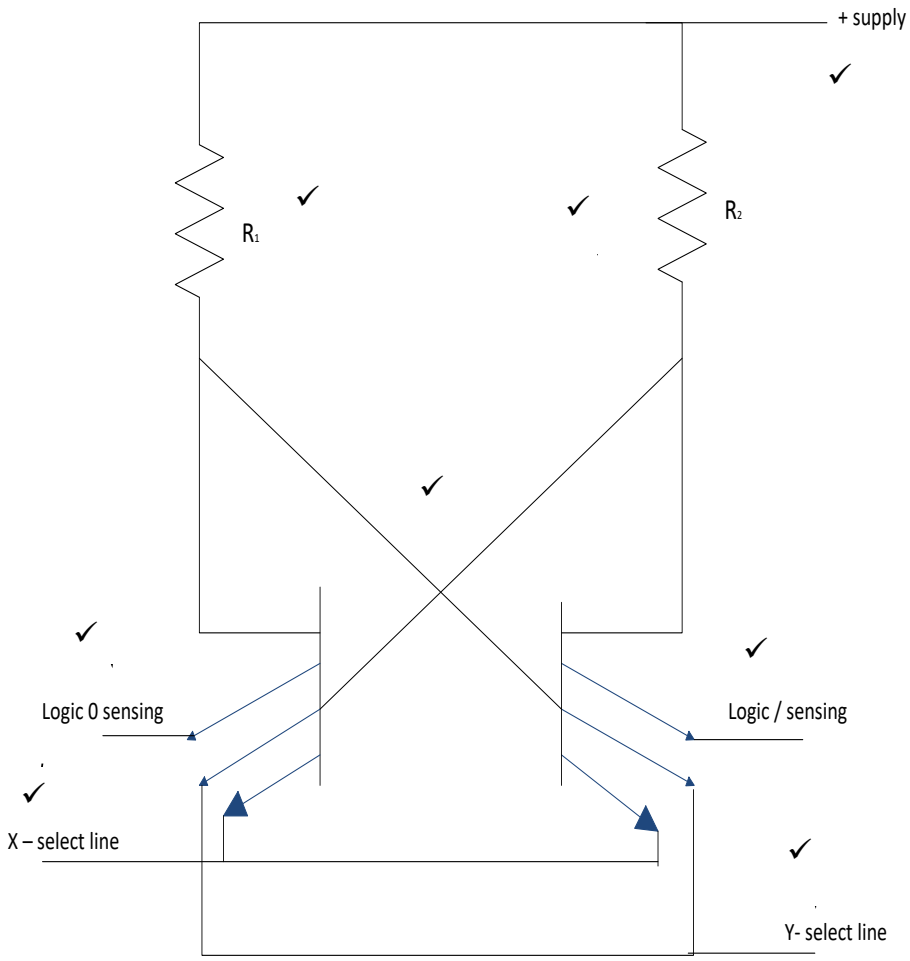

(8)
[16]

QUESTION 5

5.1

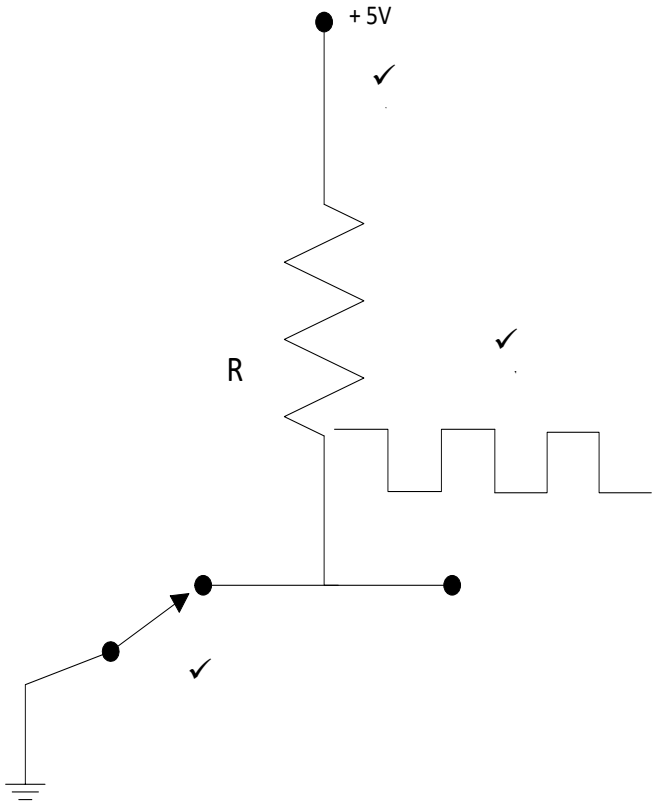

(3)

5.2
- Needs special paper
- Burning smell

(2)

5.3
- Line printer
- Page printer
- Cylindrical printer
- Chain printer

(4)
[9]

QUESTION 6

6.1 $Vo = \frac{A \times Vin \times time}{RC}$

$= \frac{2424 \times 2 \times 2 \times 10^{-3}}{10 \times 10^{3} \times 10 \times 10^{-6}}$ ✓

= 96,96 V✓ (2)

6.2

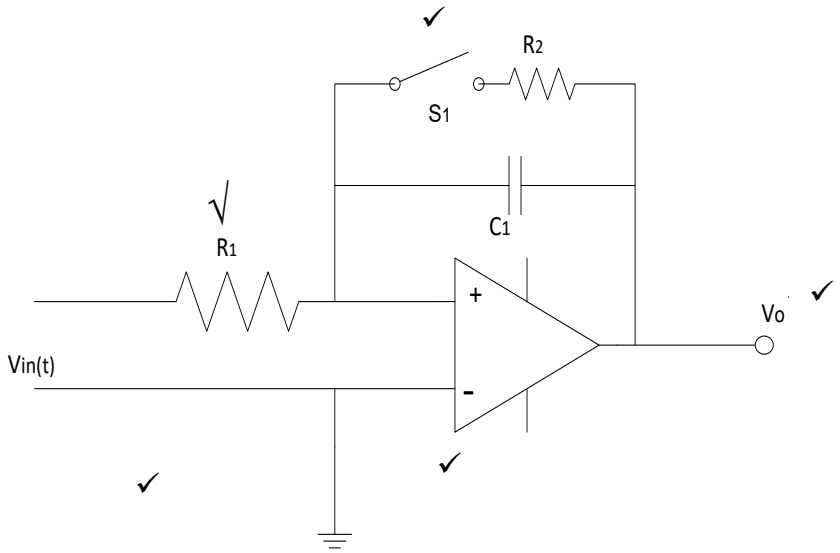

(5)

6.3 6.3.1 True
6.3.2 False

(2 × 1) (2)
[9]

QUESTION 7

7.1

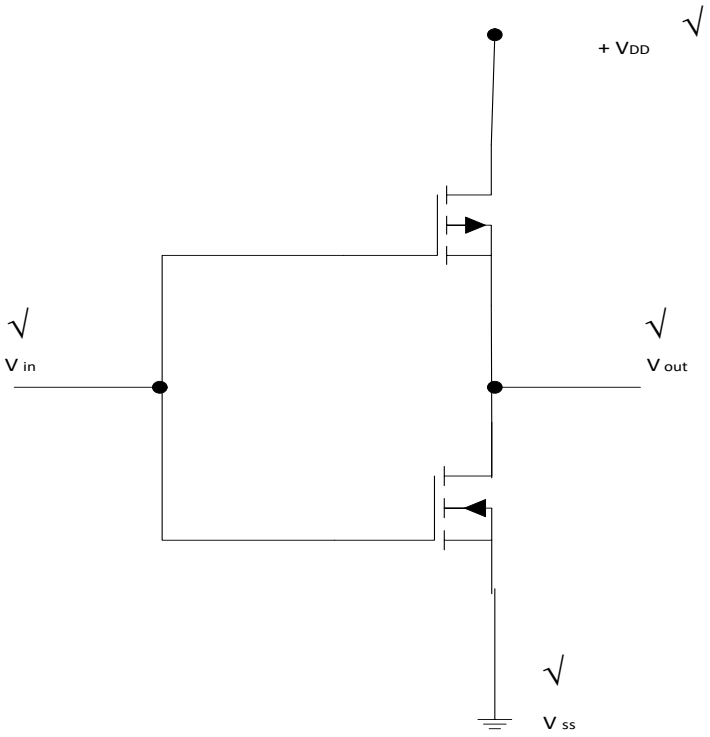

(4)

7.2 It comprises a parallel-in series-out shift register and a series-in parallel-out shift register. This enables parallel data (such as that on a computer bus) to be sent out in serial form (such as that required on telephone wires) and vice-versa. (4)

7.3 To connect digital devices across telephone wires. (1)

[9]

TOTAL: 100