higher education & training

Department:
Higher Education and Training
REPUBLIC OF SOUTH AFRICA

MARKING GUIDELINE

NATIONAL CERTIFICATE

DIGITAL ELECTRONICS N5

15 April 2021

This marking guideline consists of 9 pages.

Copyright reserved

QUESTION 1

1.1 $11{,}2_8 = 001\,001{,}010$
$= 1001{,}01_2$✓

$10{,}2_{10} = 1010{,}001_2$✓

$\therefore 11{,}2_8 \times 10{,}2_{10} = 1001{,}01_2 \times 1010{,}001_2$

```
                  1 0 0 1 0 1
                1 0 1 0 0 0 1✓
-------------------------------
                  1 0 0 1 0 1
            1 0 0 1 0 1 0 0 0 0
          1 0 0 1 0 1 0 0 0 0 0 0✓
-------------------------------
          1 0 1 1 1 0 1 1 0 1 0 1
```

$\therefore 11{,}2_8 \times 10{,}2_{10} = 1001{,}01_2 \times 1010{,}001_2$
$= 1011101{,}10101_2$✓
$= 5D{,}A_{16}$✓

(Final answer: 1 × 1 for correct answer and 1 × 1 for correct radix. BOTH MUST BE THERE, i.e. TWO marks or nothing.) (6)

1.2

```
0 0 0 1 0 1 1 1 , 1 0 0 1  ------------------------------>  0 0 0 1 0 1 1 1 , 1 0 0 1
1 0 1 0 0 0 1 0 , 0 0 1 1  -->  0 1 0 1 1 1 0 1 , 1 1 0 0+1✓  -->  0 1 0 1 1 1 0 1 , 1 1 0 1✓
                                                  No carry          0 1 1 1 0 1 0 1 , 0 1 1 0
                                                Complement answer  -1 0 0 0 1 0 1 0 , 1 0 0 1✓
                                                                   -1 0 0 0 1 0 1 0 , 1 0 0 1
                                                And add '1' to LSB                          +1✓
                                                                     1 0 0 0 1 0 1 0 , 1 0 1
```

$10111{,}1001 - 10100010{,}001 = 1\,0\,0\,0\,1\,0\,1\,0\,,1\,0\,11$✓ $= 138{,}628_{10}$✓
$-138{,}625_{10}$

(6)

1.3

$121{,}3_{16} = 001\ 010\ \ 001\ ,\ 011_2$

$= 1010001{,}011_2$ ✓

$24{,}3_{16} = 0010\ 0100,\ 0011_2$

$= 100100,\ 0011_2$

$= 100100{,}001_2$ ✓

$$\begin{array}{r} 1\,0\,0\,0\,1 \\ 100100001\overline{)\,1\,0\,1\,0\,0\,0\,1\,0\,1\,1{,}0\,0\,0} \\ 1\,0\,0\,1\,0\,0\,0\,0\,1 \\ \hline 1\,0\,0\,1\,0\,0\,1\,0\,0\,0 \\ 1\,0\,0\,1\,0\,0\,0\,0\,1 \\ \hline 1\,0\,0\,1\,0\,0\,1\,1\,1 \end{array}$$ ✓

$\therefore 1010001{,}011_2 \div 100100{,}001_2 = 10{,}001_2$ ✓ rem $\frac{100100111}{100100001}$

$= 2{,}1_8$ ✓

(Final answer: 1 × 1 for correct answer and 1 × 1 for correct radix. BOTH MUST BE THERE, i.e. TWO marks or nothing. (6)

[18]

QUESTION 2

A¤	B¤	C¤	D¤	¤	E¤	F¤	G¤	H¤
0¤	0¤	0¤	0¤	¤	0¤	0¤	1¤	1¤
0¤	0¤	0¤	1¤	¤	0¤	1¤	0¤	0¤
0¤	0¤	1¤	0¤	¤	0¤	1¤	0¤	1¤
0¤	0¤	1¤	1¤	¤	0¤	1¤	1¤	0¤
0¤	1¤	0¤	0¤	¤	0¤	1¤	1¤	1¤
0¤	1¤	0¤	1¤	¤	1¤	0¤	0¤	0¤
0¤	1¤	1¤	0¤	¤	1¤	0¤	0¤	1¤
0¤	1¤	1¤	1¤	¤	1¤	0¤	1¤	0¤
1¤	0¤	0¤	0¤	¤	1¤	0¤	1¤	1¤
1¤	0¤	0¤	1¤	¤	1¤	1¤	0¤	0¤

✓ ✓

1010
1011
1100
1101
1110
1111

Don't cares (X's) ✓

(3)

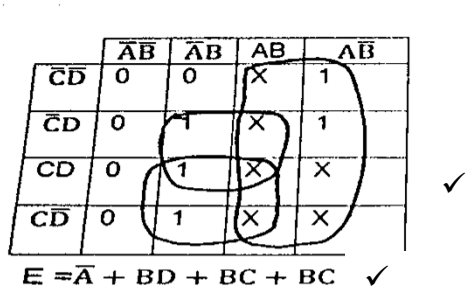
$E = \bar{A} + BD + BC + BC$

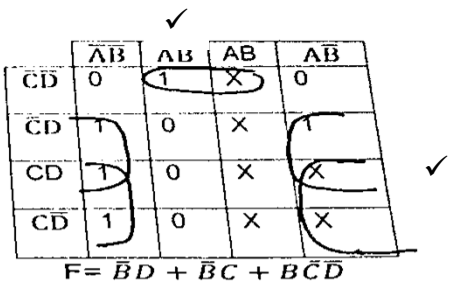
$F = \bar{B}D + \bar{B}C + B\bar{C}\bar{D}$

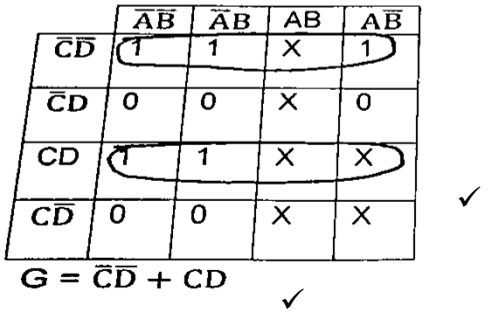
$G = \bar{C}\bar{D} + CD$

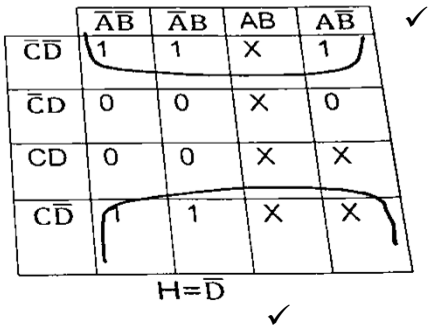
$H = \bar{D}$

(8)

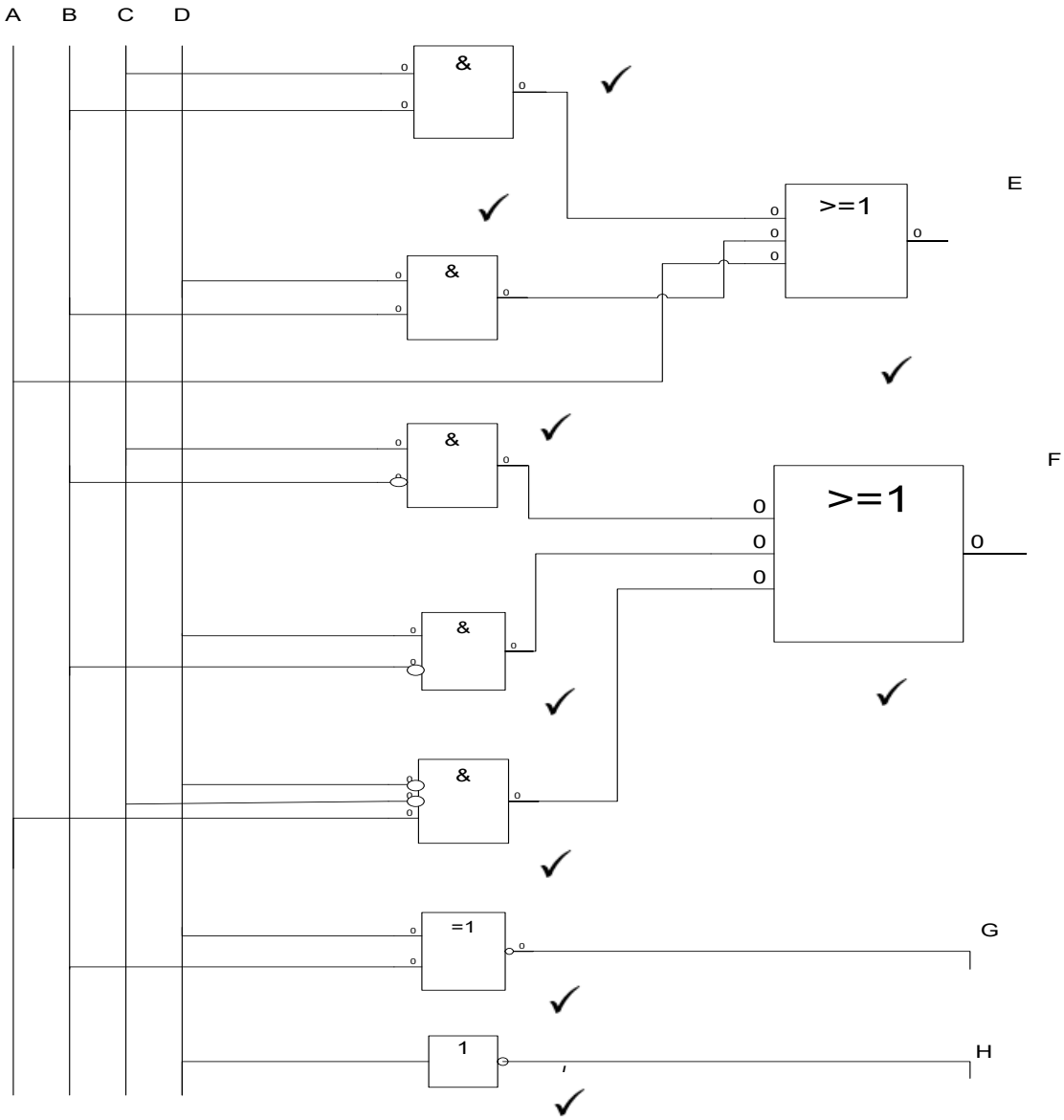
A
B
C
D
&
>=1
E
F
=1
G
1
H

(9)
[20]

QUESTION 3

3.1

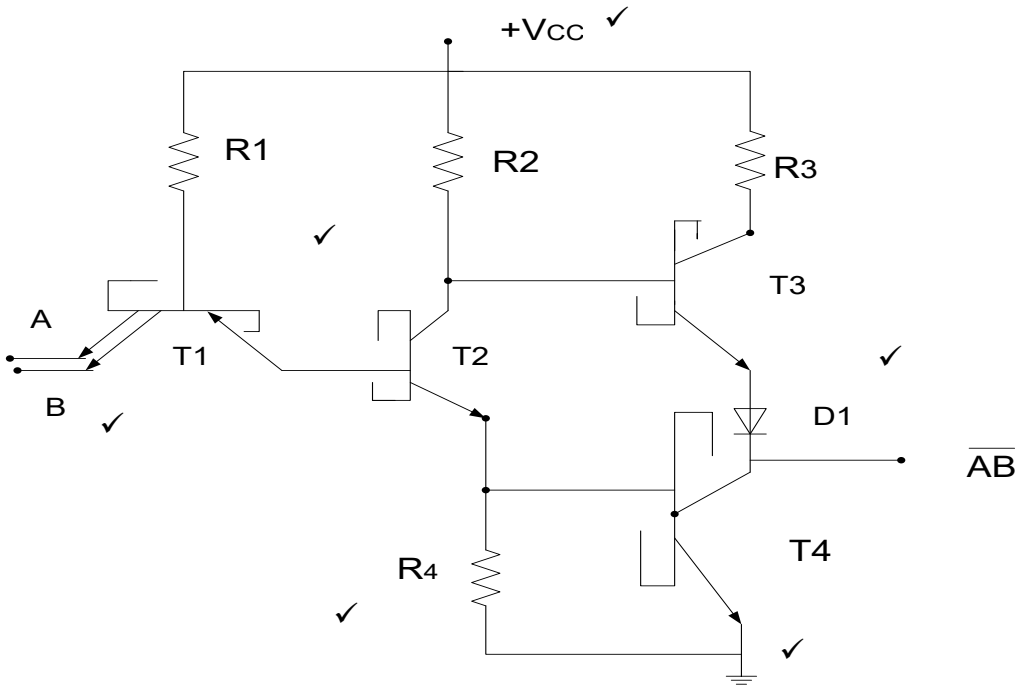

(6)

3.2

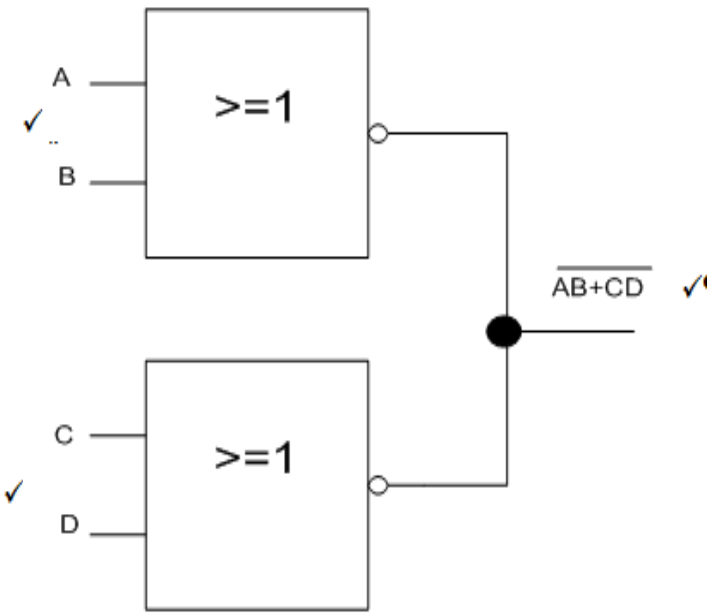

(3)

3.3 3.3.1 It is the maximum induced voltage a device can withstand without a false change in output.

3.3.2 It is the time difference between when an input is applied to a gate and when it appears at the output of the gates.

(2 × 2) (4)

[13]

QUESTION 4

4.1 $V_0 = \frac{A \times t \times V_{in}}{RC}$✓ = $\frac{1 \times 10^{-3} \times 1 \times 3\,672}{100 \times 10^{3} \times 100 \times 10^{-6}}$✓ = 0,3672 V✓ (3)

4.2

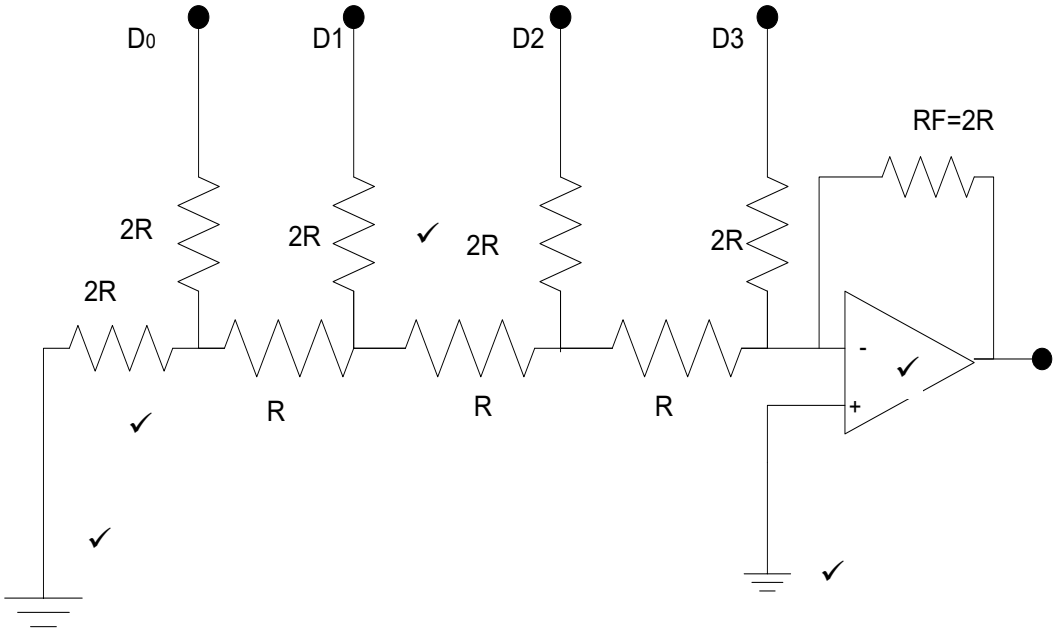

(NOTE: 2 × 1 marks for the correct circuit)
(2 × 1 marks for any correct labelled resistors)
(1 × 1 mark for correct op-amp) (5)

4.3 The R/2R ladder digital-to-analogue converter requires only two resistor values. (1)

4.4 $V_0 = \frac{V_1 + 2V_2 + 4V_4 \cdots}{2^n - 1}$ (1)

[10]

QUESTION 5

5.1

5.1.1	E
5.1.2	F
5.1.3	H
5.1.4	B
5.1.5	A
5.1.6	D
5.1.7	I
5.1.8	C

(8 × 1) (8)

5.2 $\log m_{10} = \log_{10} 2^n$✓

$\therefore \log m = n\log 2$

$\therefore n = \frac{\log m}{\log 2}$✓

$\therefore n = \frac{\log 16384}{\log 2}$✓

$\therefore n = 14$✓ (4)

5.3

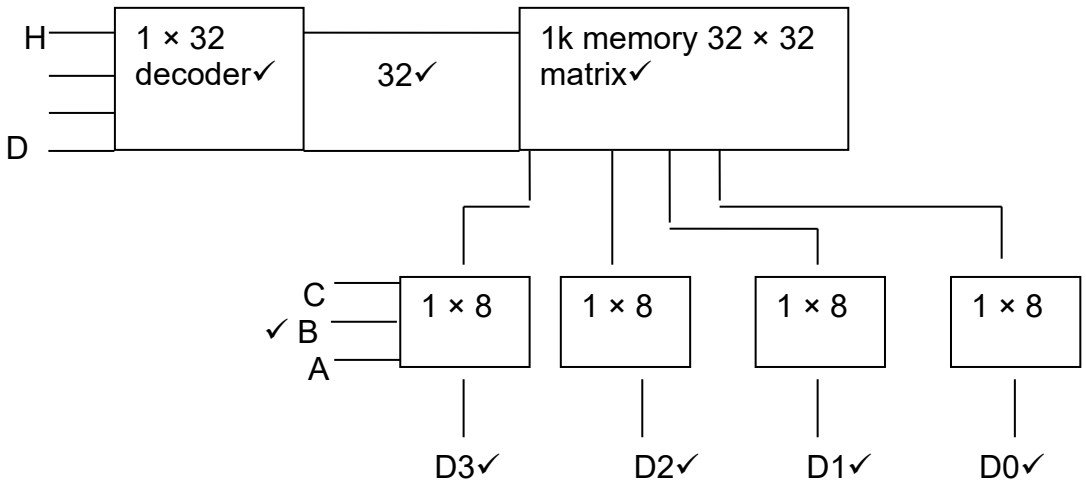

(8)
[20]

QUESTION 6

6.1
- Computer display
- Printers
- Projectors
- Speakers
- Game controllers (Any 2 × 1) (2)

6.2
- Keyboard
- Mouse
- Barcode reader
- Scanner
- Microphone
- Touch screen
- Digital camera (Any 2 × 1) (2)

6.3
- Chain printers
- Drum printers (2)

6.4

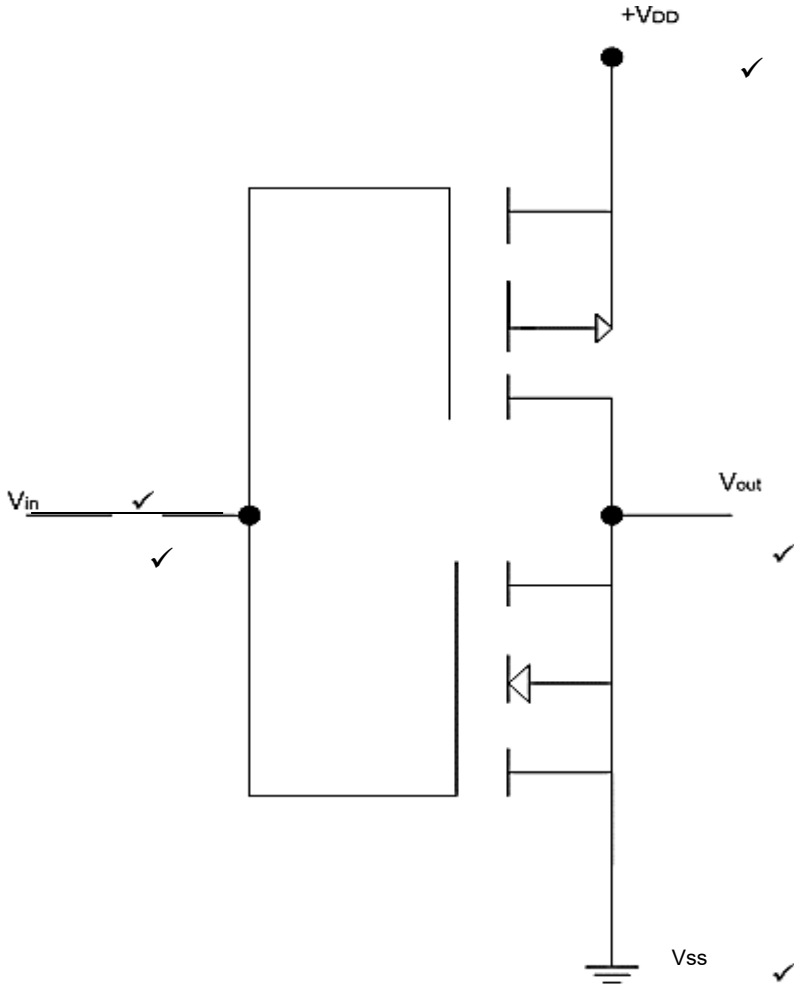

(NOTE: 1 × 3 for the correctness of the circuit.)
(1 × 2 for any TWO correct labels.) (5)
[11]

QUESTION 7

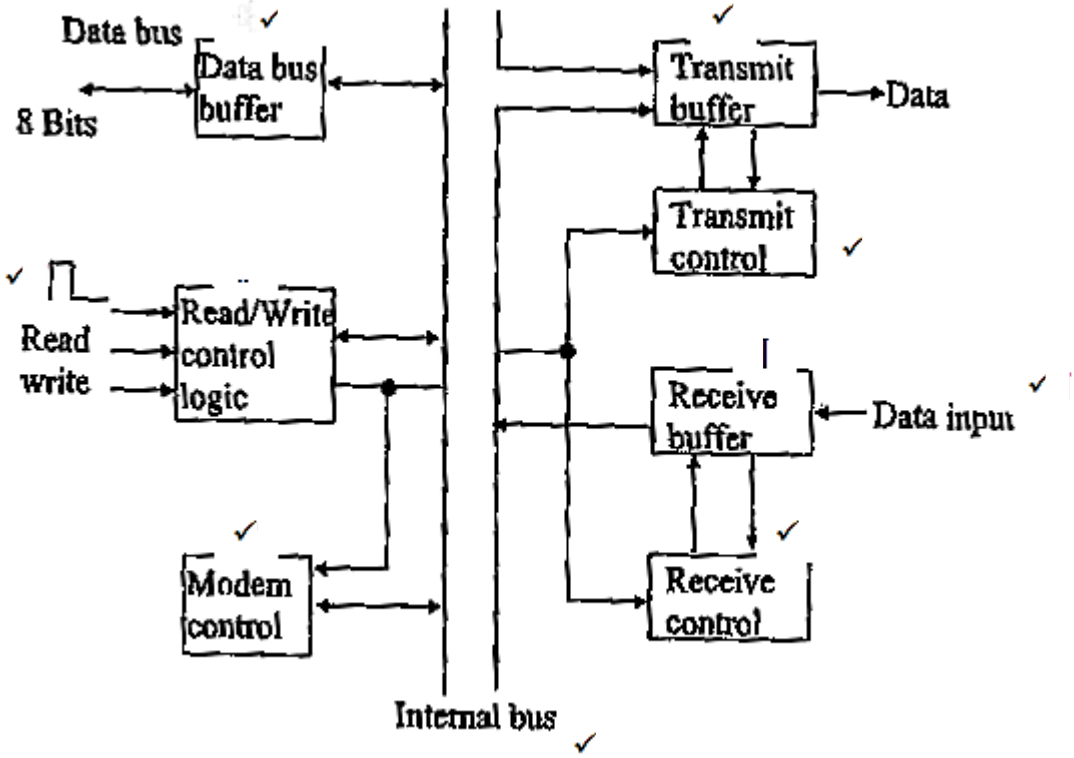

[8]

TOTAL: 100

Copyright reserved