higher education & training

Department:
Higher Education and Training
REPUBLIC OF SOUTH AFRICA

MARKING GUIDELINE

NATIONAL CERTIFICATE

DIGITAL ELECTRONICS N5

9 April 2020

This marking guideline consists of 7 pages.

Copyright reserved

QUESTION 1

1.1

A1, C_{16} = $10100001{,}1100_2$ = $10100001{,}11_2$ ✓

$21{,}5_{10}$ = $10101{,}1_2$ ✓

$21{,}5_{10}$ - A1, C_{16} = $10101{,}1_2$ – $10100001{,}11_2$

00010101,10		0 0 01 0 1 0 1,1 0
10100001,11	01011110,00 ✓	0 1 0 1 1 1 1 0,0 0✓
No carry		0 1 1 1 0 0 1 1,1 0
Negative answer		- (1 0 0 0 1 1 0 0,0 1)✓

∴$21{,}5_{10}$ - A1, C_{16} = $10101{,}1_2$ – $10100001{,}11_2$ = - $140{,}25_{10}$✓ (6)

1.2 $237{,}7_8$= 010 011 111, 111_2 = 10011111, 111_2

A,7_{16} =1010, 0111_2

```
                                  1 1 1 1, 0 1 0
                 ___________________________________
   10100111     |
 ___________    | 1 0 0 1 1 1 1 1 1 1 1 0 , 0 0 0
                   1 0 1 0 0 1 1 1
                  ___________
                    1 0 0 1 1 0 0 0 1
                      1 0 1 0 0 1 1 1
                  ___________
                      1 0 0 0 1 0 1 0 1
                        1 0 1 0 0 1 1 1
                  ___________
                          1 1 0 1 1 1 0 0
                          1 0 1 0 0 1 1 1
                  ___________
                              1 1 0 1 0 1 0 0
                              1 0 1 0 0 1 1 1
                              ___________
                                    101101
```

$$\therefore 10011111_2 \div 1010{,}0111_2 = 1111{,}011_2 = 17{,}2_8$$

Note to markers:

(ONE mark for each conversion)
(TWO marks for the calculation)
(For final answer: ONE mark for correct answer and ONE for correct radix) (6)

1.3 $11,2_8 \times 10,125_{10}$

$11,2_8 \times 10,125_{10}$
$11,2_8 = 001\ 001,010_2$ ✓
$10,125_{10}$

2^3	2^2	2^1	2^0	2^{-1}	2^{-2}	2^{-3}
1	0	1	0	0	0	1

✓

$$\begin{array}{r} 1\,0\,0\,1\,0\,1 \\ 1\,0\,1\,0\,0\,0\,1 \\ \hline 1\,0\,0\,1\,0\,1 \checkmark \\ 1\,0\,0\,1\,0\,1\,0\,0\,0\,0 \\ 1\,0\,0\,1\,0\,1\,0\,0\,0\,0\,0\,0 \\ \hline 1\,0\,1\,1\,1\,0\,1\,1\,0\,1\,0\,1 \checkmark \end{array}$$

∴ $1001,01_2 \times 1010,001_2 = 1011101,10101_2$ ✓

$$\therefore 1001,01 \times 1010,001 = 1011101,10101 = 1011101,1010 = 5D,A8_{16}$$ (6)
[18]

QUESTION 2

A	B	C		J_A	K_A		J_B	K_B		J_C	K_C	
0	0	0		0	d		0	d		1	d	✓
0	0	1		0	d		1	d		d	1	✓
0	1	0		0	d		d	0		1	d	✓
0	1	1		1	d		d	1		d	1	✓
1	0	0		d	d		0	d		1	d	✓
1	0	1		d	0		1	d		d	1	✓
1	1	0		d	d		d	d		d	d	✓ ✓
1	1	1		d	d		d	d		d	d	✓

(9)

(9)

$\bar{c}$	$\bar{A}\bar{B}$	$\bar{A}B$	AB	$A\bar{B}$
$\bar{c}$	0	0	d	d
c	0	1	d	d

$Ja = Bc$

$\bar{c}$	$\bar{A}\bar{B}$	$\bar{A}B$	AB	$A\bar{B}$
$\bar{c}$	d	d	d	0
c	d	d	d	1

$Ka = Ac$

$\bar{c}$	$\bar{A}\bar{B}$	$\bar{A}B$	AB	$A\bar{B}$
$\bar{c}$	0	d	d	0
c	1	d	d	0

$Jb = \bar{A}c$ √

$\bar{c}$	$\bar{A}\bar{B}$	$\bar{A}B$	AB	$A\bar{B}$
$\bar{c}$	d	0	d	d
c	d	1	d	d

$Kb = Bc$ √

$\bar{c}$	$\bar{A}\bar{B}$	$\bar{A}B$	AB	$A\bar{B}$
$\bar{c}$	1	1	d	1
c	d	d	d	d

$Jc = \bar{C}$ √

$\bar{c}$	$\bar{A}\bar{B}$	$\bar{A}B$	AB	$A\bar{B}$
$\bar{c}$	d	d	d	d
c	1	1	d	1

$Kc = C$

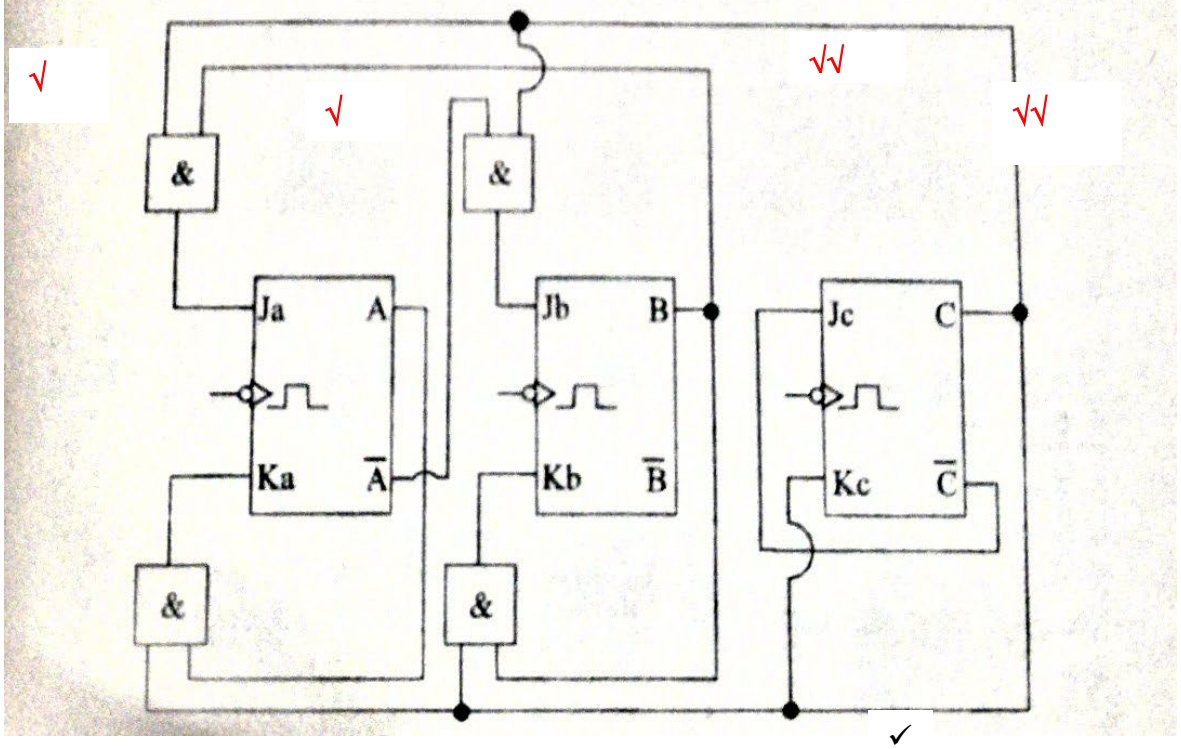

√ √ √√ √√ ✓ ✓

(13)
[22]

QUESTION 3

3.1 3.1.1 G
3.1.2 E
3.1.3 A
3.1.4 F
3.1.5 H
3.1.6 B
3.1.7 D

(7 × 1) (7)

3.2 $V_H = V_{OH} - V_{IH}$ = 20 – 3 = 17 V ✓
$V_L = V_{IL} - V_{OL} = 0,9 - 0,5 = 0,4V$ ✓ (2)

3.3 3.3.1

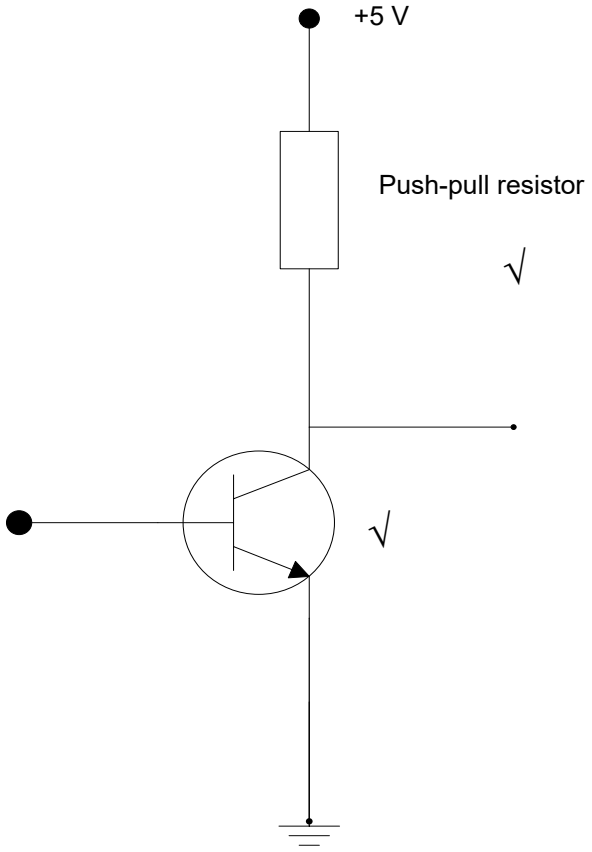

(3)

3.3.2 The purpose of the pull-up resistor is to allow the output to be wired to the input of the next stage. (3)
[15]

QUESTION 4

4.1 4.1.1 True
4.1.2 True

(2 × 1) (2)

4.2

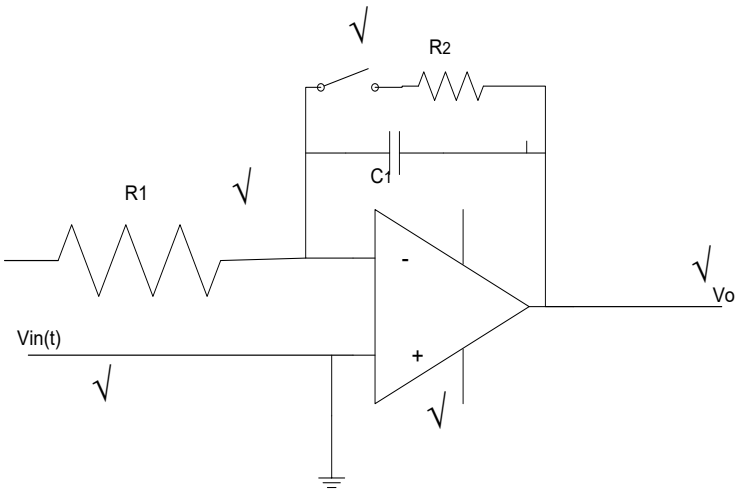

(5)

4.3 $V_O = \frac{NVT}{RC}$

$= \frac{2560 \times 2 \times 2 \times 10^{-3}}{100 \times 10^{3} \times 100 \times 10^{-6}}$ ✓ = 1,024 V✓✓ (3)

[10]

QUESTION 5

5.1 The data is arranged on concentric tracks that are divided into sectors. Each sector with its track is called a block. (3)

5.2 5.2.1 Electrically erasable programmable read-only memory

5.2.2 Programmable read-only memory

5.2.3 Random access memory

5.2.4 Read-only memory

5.2.5 Erasable programmable read-only memory

(NOTE TO MARKERS: 2 marks for the full correct meaning of the acronym, i.e. either 2 marks for each acronym or no marks.)
(5 × 2) (10)

5.3 Programmed once by the manufacturer and cannot be changed, it is made from specifications supplied by the user, it is expensive and only suitable if a large quantity is required. (2)

[15]

QUESTION 6

6.1 6.1.1 Electrostatic printer – It uses special coated paper on which electrostatic charges are placed by conducting nibs. A liquid toner is then attached to these charges.

6.1.2 Thermal printer – The image is burned onto the outer layer. The toner then covers these burned areas.

6.1.3 Ink-jet printer – Electrically charged ink droplets are carried to the nibs through capillaries. These droplets are defected by an electric field to fall on the paper so as to form characters.

(3 × 3) (9)

6.2
- It requires special paper to print on.
- Burning has a slight smell.

(2)
[11]

QUESTION 7

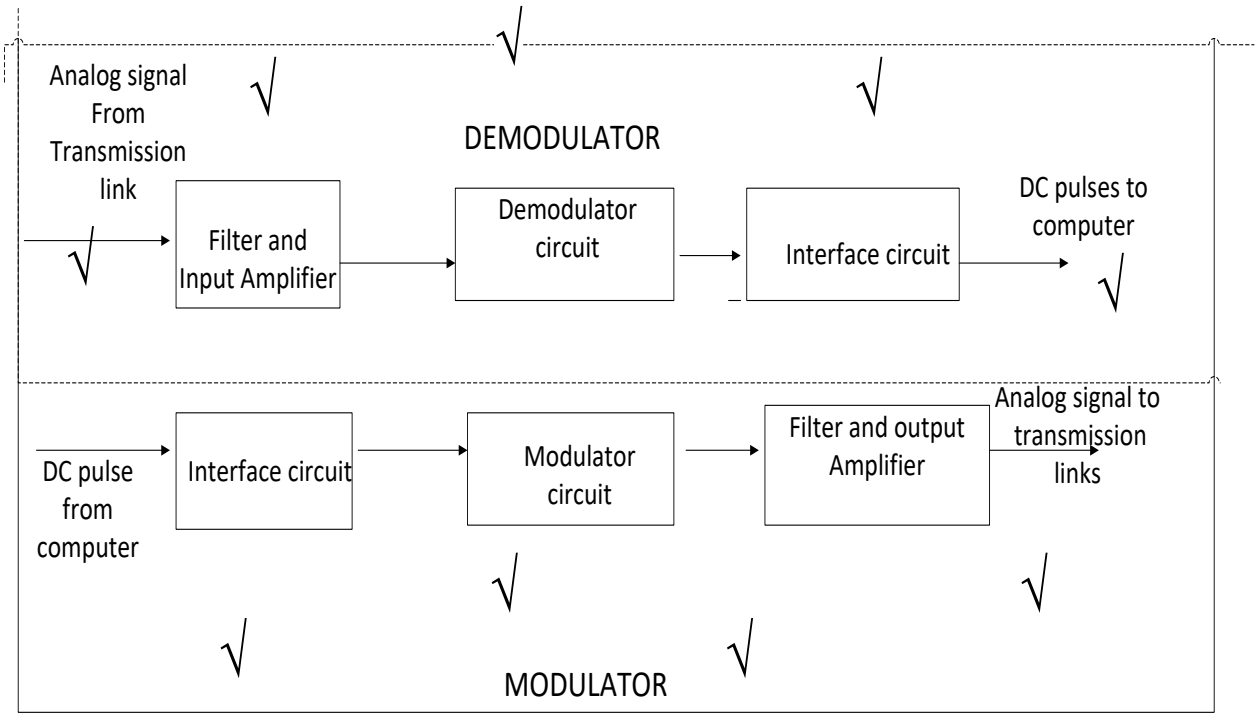

[9]

TOTAL: 100

Copyright reserved