higher education & training

Department:
Higher Education and Training
REPUBLIC OF SOUTH AFRICA

NASIENRIGLYN

NASIONALE SERTIFIKAAT

SYFERELEKTRONIKA N4

7 AUGUSTUS 2019

Hierdie nasienriglyn bestaan uit 9 bladsye.

Kopiereg voorbehou

VRAAG 1

1.1
1.1.1 A
1.1.2 B
1.1.3 C
1.1.4 B
1.1.5 A

(5 × 1) (5)

1.2
1.2.1 B
1.2.2 F
1.2.3 E
1.2.4 C
1.2.5 A

(5 × 1) (5)

1.3
1.3.1 Waar
1.3.2 Onwaar
1.3.3 Onwaar
1.3.4 Onwaar
1.3.5 Onwaar

(5 × 1) (5)

1.4
1.4.1

1010,1011
+111,1✓
10010,0011✓

1.4.2 11101_2 ✓✓

1.4.3

1100
-1011✓
0001✓

(3 × 2) (6)
[21]

VRAAG 2

2.1 F, A_{16} = 1111, 1010✓

5, 7_8 = 0101, 1110 = 1010, 0001
+1✓
1010, 0010✓

1111,1010✓
1010,0010
1001,1100✓
= $9{,}75_{10}$✓ (6)

2.2 $8{,}5_{10}$ = 1000, 100✓

6, 2_8 = 0110, 010 = 1001, 101✓

1000,100
1001, 101 ✓
0010,001
+1 ✓
0010, 010 = 2. 25_{10} ✓ (5)

2.3 1,111 ✓
1111010 $\sqrt{11101011000}$
-1111010
11100010✓
-1111010
11010000
-1111010 ✓
10101100
-1111010 ✓
00110010✓
=1, 7_8 ✓ (6)

2.4 110000011010
110101✓
110000011010
000000000000✓
110000011010
000000000000 ✓
110000011010
110000011010✓
1010000, 00101100010✓
=50,2$C4_{16}$✓ (6)

[23]

VRAAG 3

3.1 3.1.1 $F = AB\overline{C} + A\overline{B}C + \overline{A}B\overline{C} + \overline{A}\,\overline{B}\,C$

$A\,(B\,\overline{C} + \overline{B}\,C) + \overline{A}\,(B\,\overline{C} + \overline{B}\,C)$✓

$A\,(B \oplus C) + \overline{A}\,(B \oplus C)$✓

LET $B \oplus C = K$✓

$A\,K + \overline{A}\,K$✓

$K\,(A + \overline{A})$✓

$= K = B \oplus C$✓ (6)

3.1.2 $X\,(X + Y)\,(\overline{X} + \overline{Y} + Z)$

$XX + XY\,(\overline{X} + \overline{Y} + Z)$✓

$X\,(1 + Y)\,(\overline{X} + \overline{Y} + Z)$✓

$X\,(1)\,(\overline{X} + \overline{Y} + Z)$✓

$X\overline{X} + X\,\overline{Y} + XZ$✓

$X\overline{Y} + XZ$✓ (5)

3.2 3.2.1

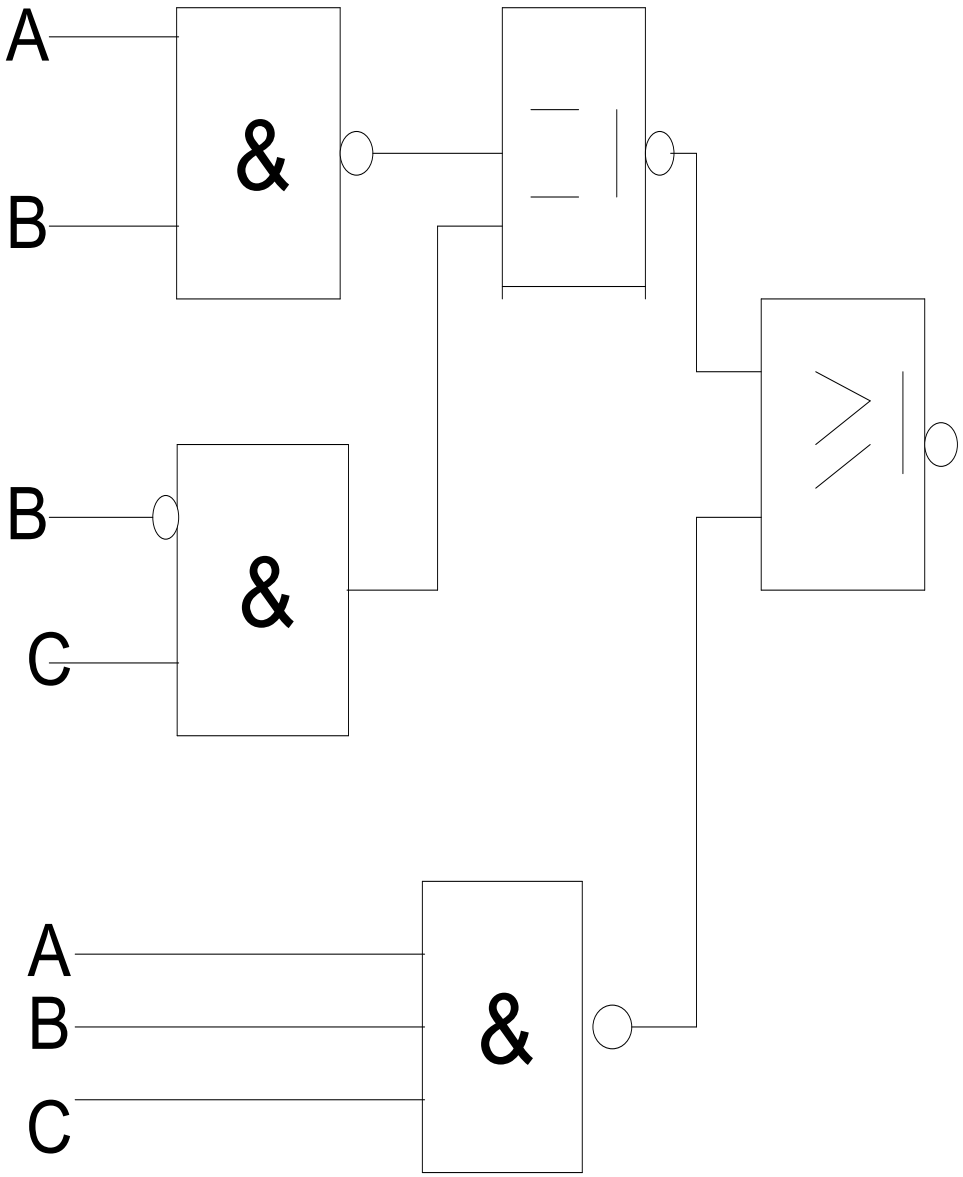

(6)

3.2.2

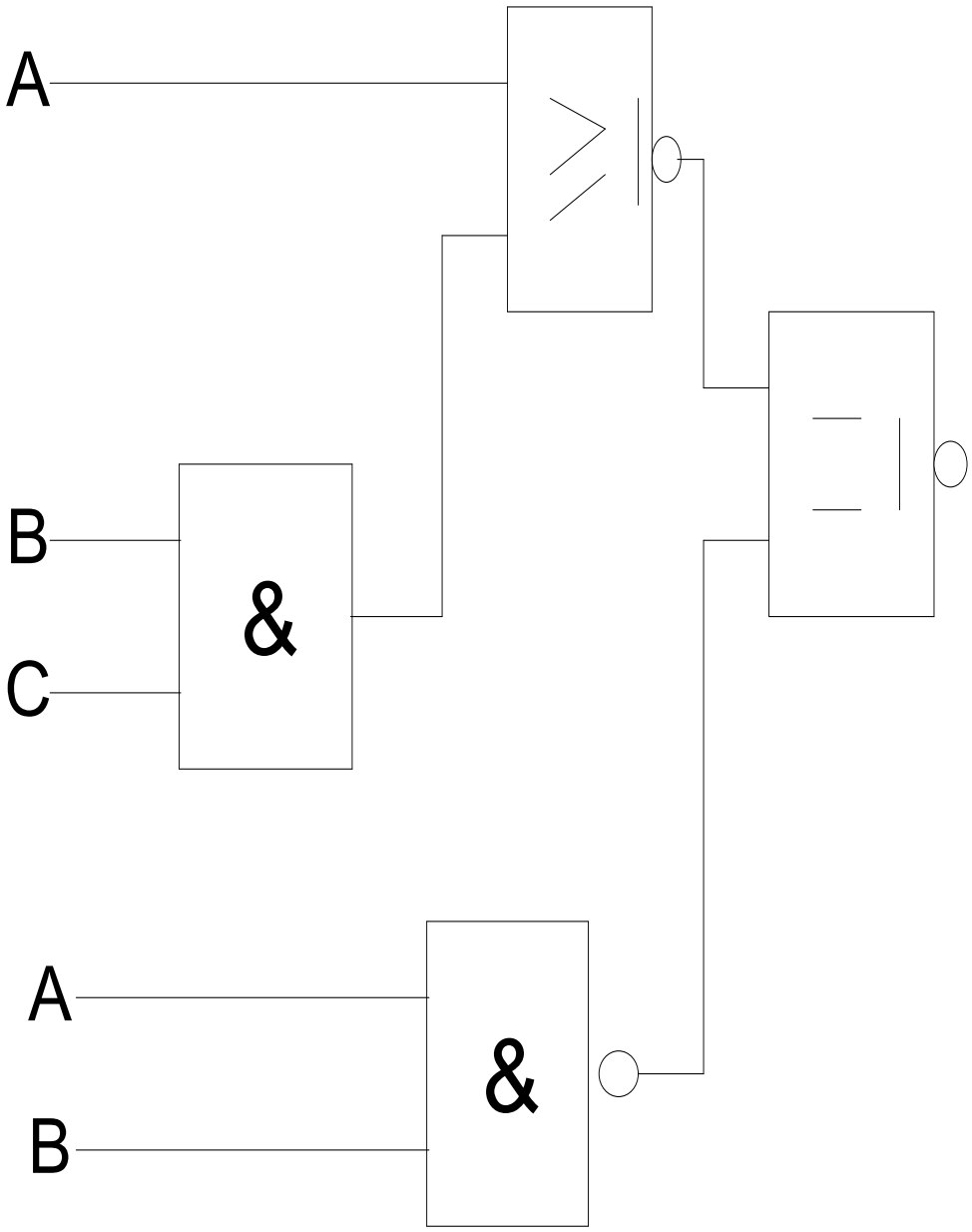

(5)
[22]

VRAAG 4

4.1

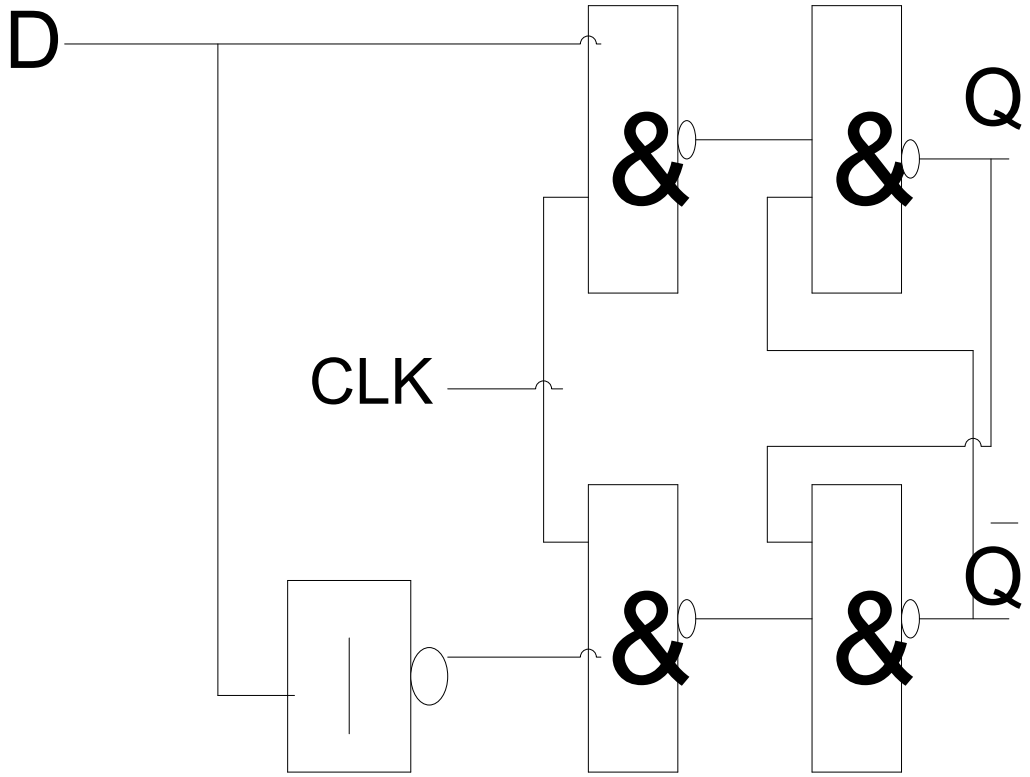

(8)

4.2

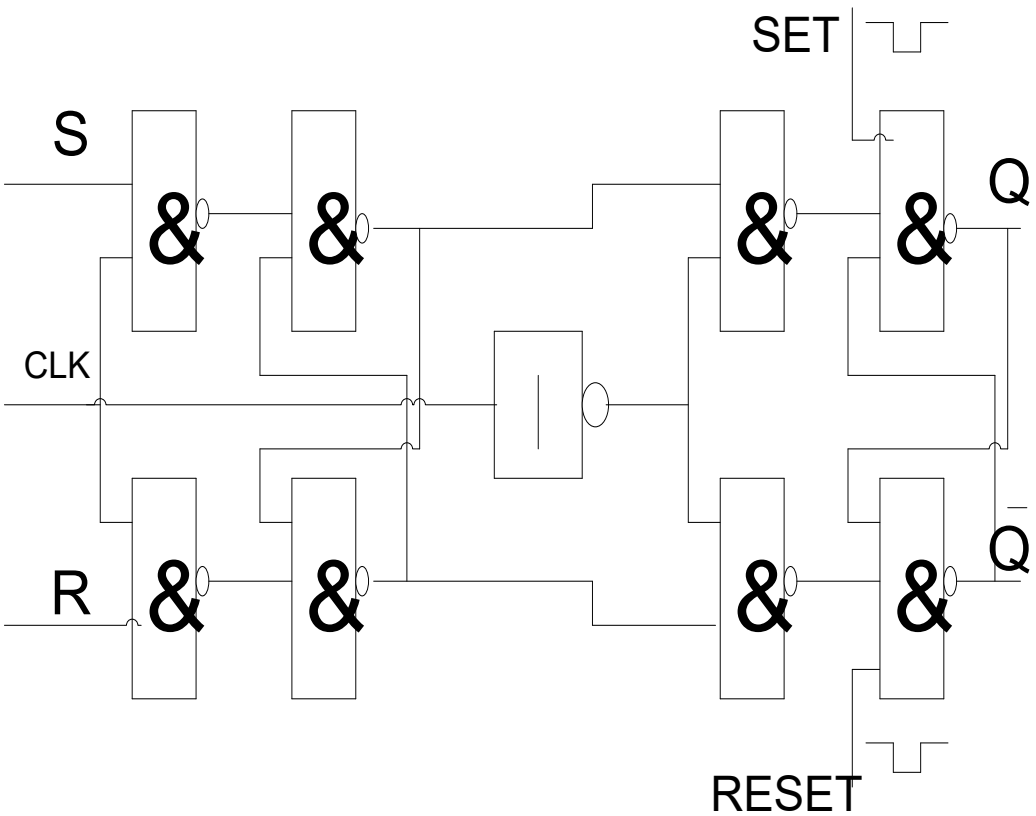

(10)
[18]

VRAAG 5

5.1

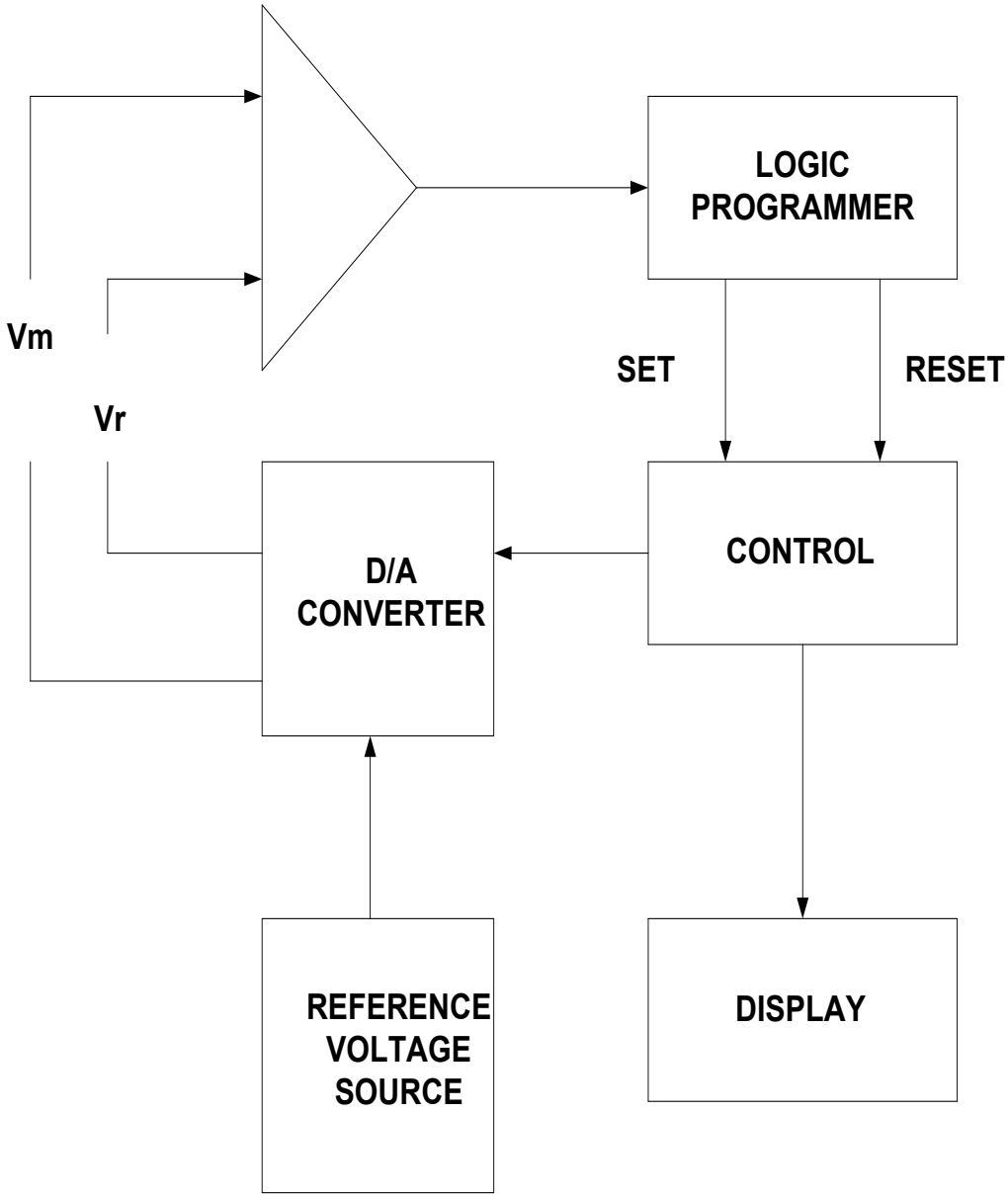
LOGIC PROGRAMMER
Vm
Vr
SET
RESET
D/A CONVERTER
CONTROL
REFERENCE VOLTAGE SOURCE
DISPLAY

(8)

5.2

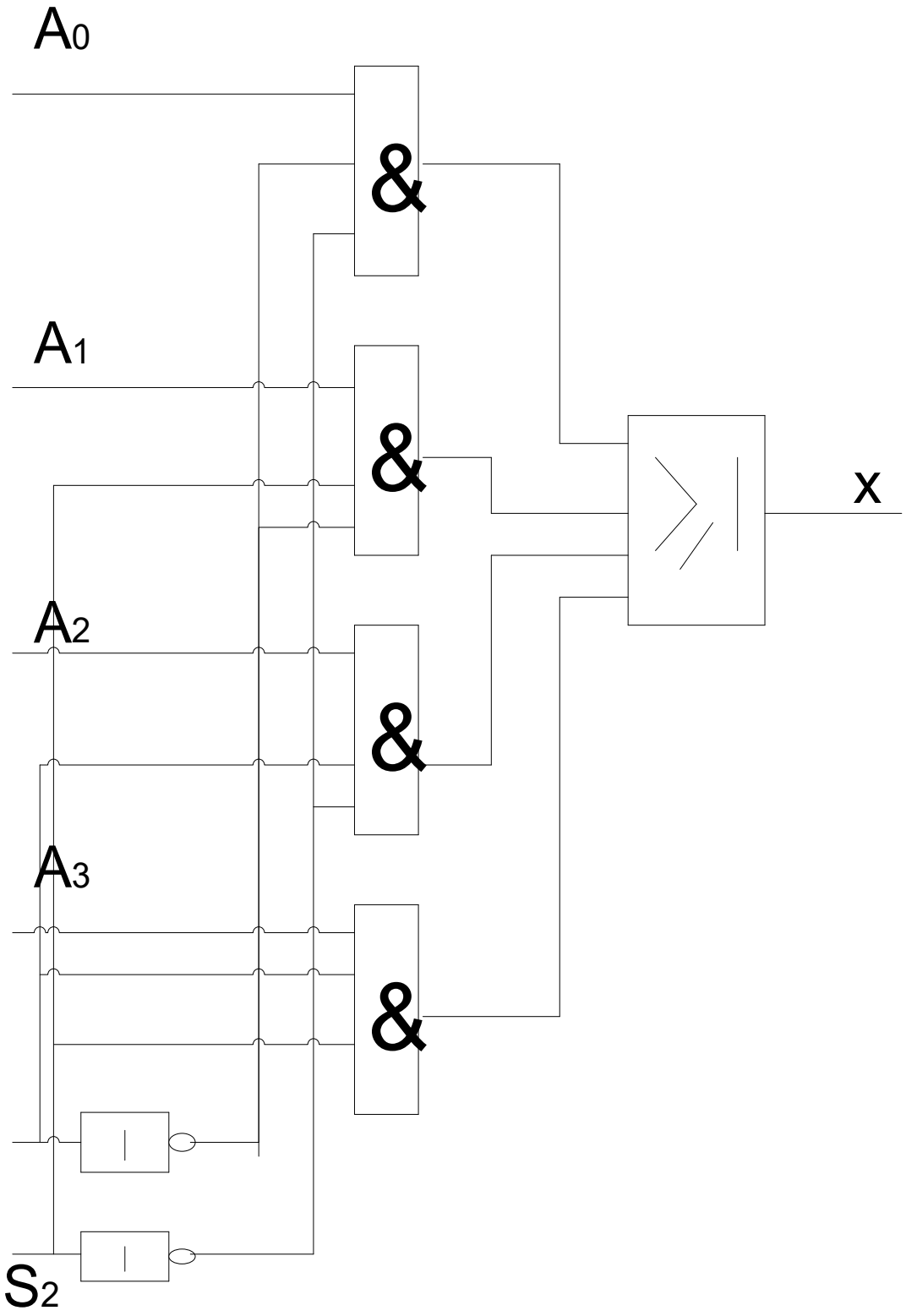

(8)
[16]

TOTAAL: 100

Kopiereg voorbehou