higher education & training

Department:
Higher Education and Training
REPUBLIC OF SOUTH AFRICA

NASIENRIGLYN

NASIONALE SERTIFIKAAT

SYFERELEKTRONIKA N4

2 AUGUSTUS 2018

Hierdie nasienriglyn bestaan uit 7 bladsye.

Kopiereg voorbehou

VRAAG 1

1.1 Sit desimaal na die binêre ekwivalent om. (2)

1.2 'n Dekodeerder sit binêr na desimaal om en 'n enkodeerder sit desimaal na die verlangde kode om. (2)

1.3 1.3.1 'n Toevoer wat die Q-afvoer van 'n geheue-element na '1' dwing.

1.3.2 'n Toevoer wat die Q-afvoer van 'n geheue-element na '0' dwing.
(2 × 2) (4)

1.4 Totaal/som van die gewigte is gelyk aan 'n enkelsyfer-9. (2)

1.5 1.5.1 X

1.5.2 $\overline{X} + Y$

1.5.3 1

1.5.4 X

1.5.5 X
(2 × 1) (2)
[15]

VRAAG 2

2.1 2.1.1 $17,5_8 = 01111,101_2$✓
$25,75_{10} = 11001,110_2$✓

= 11001,110 2de komplement = 00110,001
+1
00110,010✓

Geen oordrag

$$\begin{array}{r} 01111,101 \\ +\ 00110,010 \\ \hline 10101,111 \end{array}$$ ✓✓

$$\begin{array}{r} 01010,000 \\ +1 \\ \hline -1010,001 \end{array}$$

Dus is $1111,101_2 - 11001,110_2 = -10,125_{10}$✓

2.1.2 $A5,C_{16} = 10100101,1100_2$✓
$3,5_8 = 011,101_2$✓

```
      101001011100
            11101✓
  ------------------
      101001011100
     000000000000
    101001011100
   101001011100
  101001011100
  ------------------
  1001011000,1101100₂✓✓
```

Dus is $10100101,1100_2 \times 11,101_2 = 1130,660_8$✓

(2 × 6) (12)

2.3 $75,125_{10} = 1001011,001_2$✓
$25,1_8 = 010101,001_2$✓

```
                 11,100
10101001√1001011001000
          -10101001
          ---------
           100000111
          -10101001
          ---------
           10111100
          -10101001
          ---------
           0001001100✓✓✓
```

Dus is $1001011,001_2 \div 10101,001_2 = 11,100_2 = 3,5_{10}$✓ (6)

2.4 $58,25_{10} = 0111010,0100_2$ tweekomplement 1000101,1011✓
+1
1000101,1100

$-9,0625_{10} = 0001001,0001_2$ tweekomplement 1110110,1110✓
+1
1110110,1111

```
                1000101,1100
                1110110,1111
Oordrag1        ------------
                0111100,1011

              1000011,0100
                        +1
  ------------------------
  -1000011,0101✓✓✓
```

Dus is $-58,25_{10} - 9,0625_{10} = -1000011,0101 = -67,3125_{10}$✓ (6)

[24]

VRAAG 3

3.1 3.1.1

$F = \overline{A}\overline{C} + \overline{B}C + A\overline{C} + \overline{A}B + B\overline{C} + ABC$
$= \overline{A}\overline{C} + \overline{B}C + \overline{A}\overline{B} + A\overline{C} + \overline{A}B + B(\overline{C} + AC)$✓
$= \overline{A}C + \overline{B}C + A\overline{B} + A\overline{C} + B\overline{C} + B(A + \overline{A})$✓
$= \overline{A}C + \overline{B}C + A\overline{B} + A\overline{C} + B(1 + \overline{C})$✓
$= \overline{A}C + \overline{B}C + B + A(1 + \overline{C})$✓
$= A+B+C+\overline{B}C$✓
$= A + B + C$✓

3.1.2

$F=A\overline{B}\overline{C} + \overline{A}\overline{B}C + ABC + \overline{A}B\overline{C}$
$= A(\overline{B}\overline{C} + BC) + \overline{A}(\overline{B}C + B\overline{C})$✓
$=A(\overline{B \oplus C}) + \overline{A}(B \oplus C)$✓
LET $B \oplus C = K$✓
$= A\overline{K} + \overline{A}K$✓
$= A \oplus K$✓
$= A \oplus B \oplus C$✓

(2 × 6) (12)

3.2 3.2.1

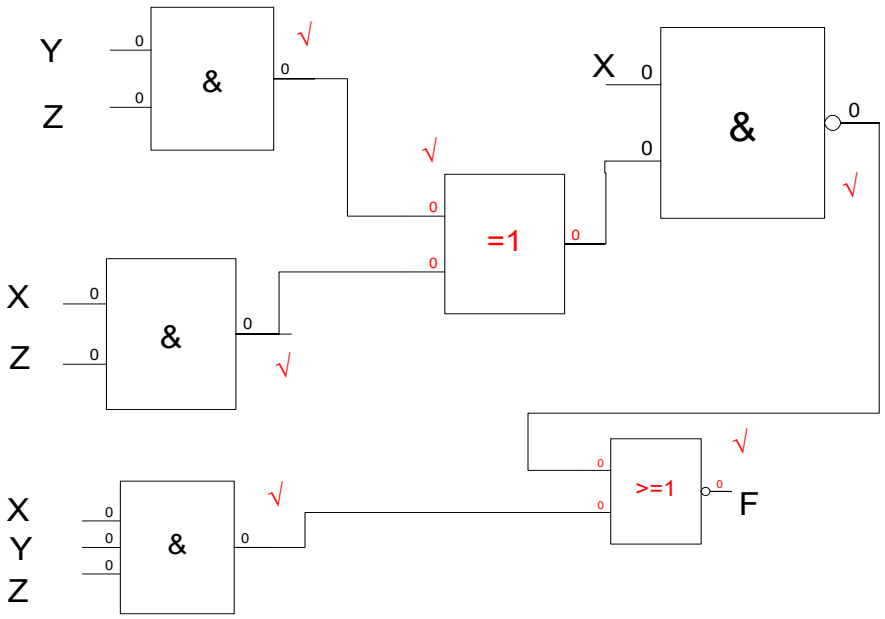

3.2.2

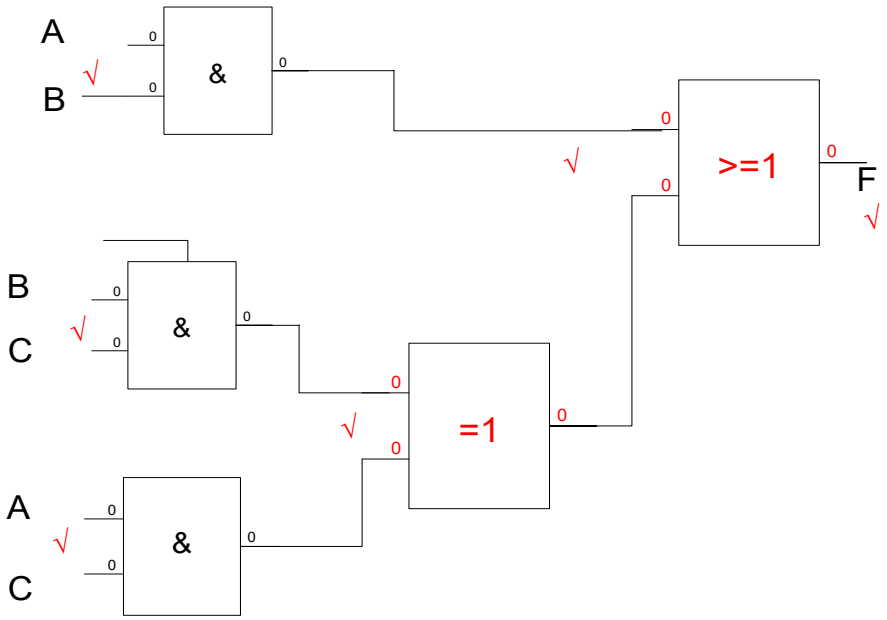

(2 × 6) (12)
[24]

VRAAG 4

4.1

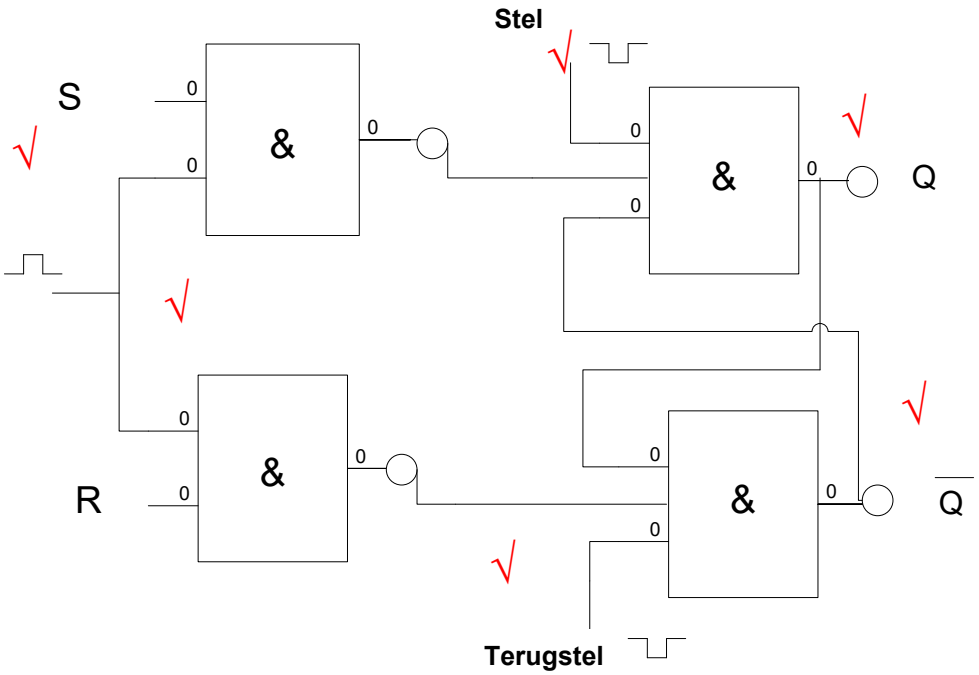

√ √ √ √

S	R	Q	$\overline{Q}$
0	0	Q	$\overline{Q}$
0	1	0	1
1	0	1	0
1	1	*	*

(10)

4.2

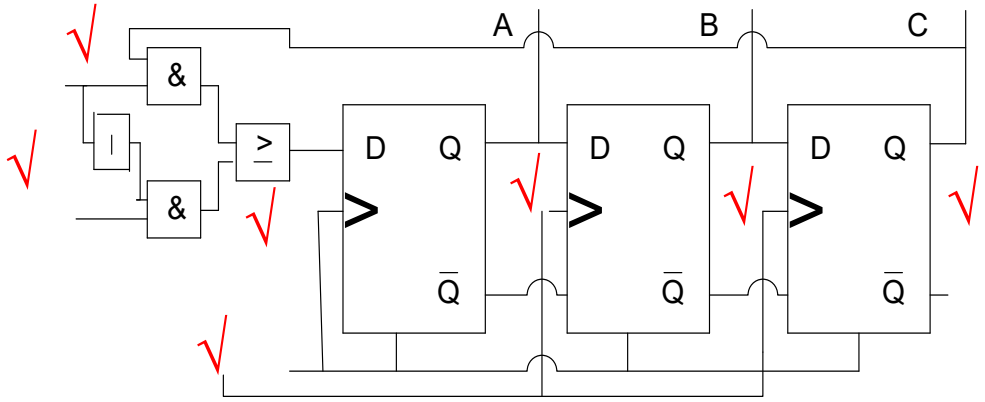

(7)
[15]

VRAAG 5

5.1

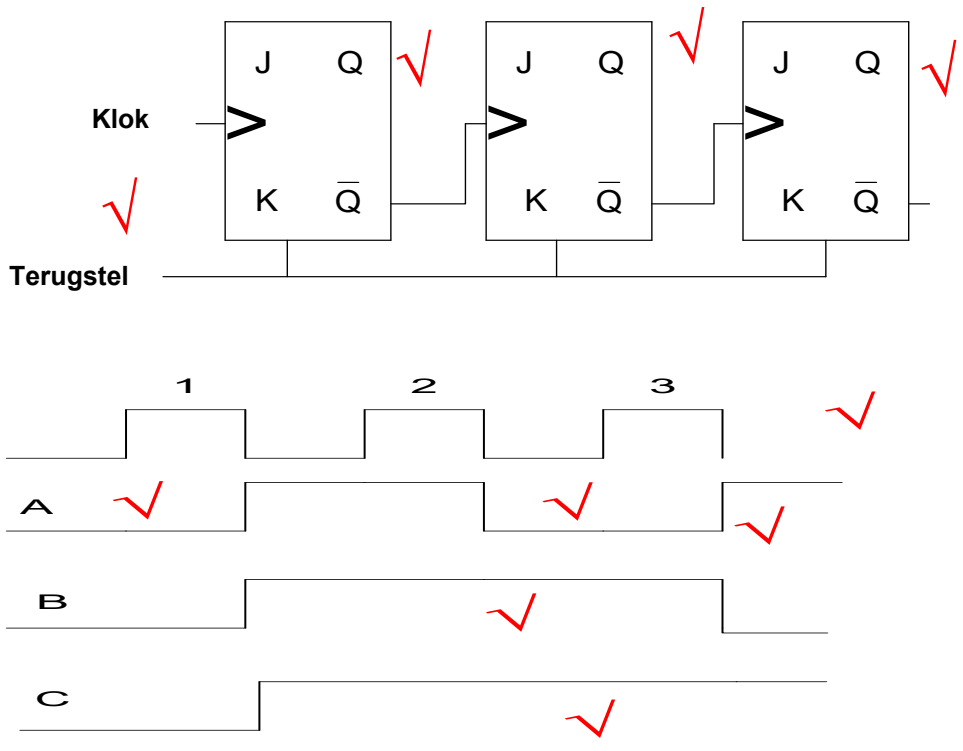

(10)

5.2

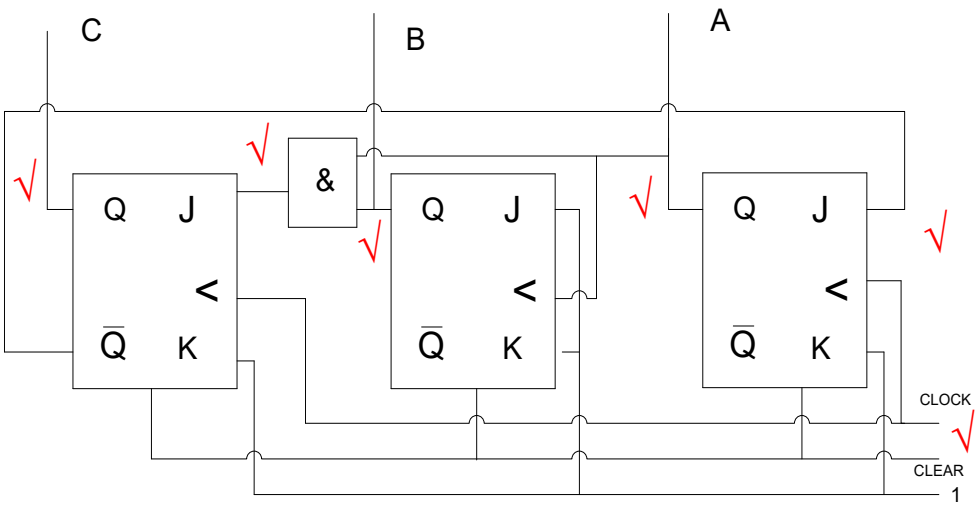

√ √ √ √

PULS	C	B	A
0	0	0	0
1	0	0	1
2	0	1	0
3	0	1	1
4	1	0	0
5	0	0	0

(10)
[20]

TOTAAL: 100

Kopiereg voorbehou