higher education & training

Department:
Higher Education and Training
REPUBLIC OF SOUTH AFRICA

NASIENRIGLYN

NASIONALE SERTIFIKAAT

SYFERELEKTRONIKA N4

19 April 2021

Hierdie nasienriglyn bestaan uit 7 bladsye.

Kopiereg voorbehou

VRAAG 1

1.1	1.1.1	C		
	1.1.2	C		
	1.1.3	D		
	1.1.4	C		
	1.1.5	A		
			(5 × 1)	(5)
1.2	1.2.1	Gelykheids		
	1.2.2	OF		
	1.2.3	Dubbel-		
	1.2.4	Hamming		
	1.2.5	Basis		
			(5 × 1)	(5)
1.3	1.3.1	B		
	1.3.2	A		
	1.3.3	D		
	1.3.4	E		
	1.3.5	C		
			(5 × 1)	(5)
1.4	1.4.1	Onwaar		
	1.4.2	Waar		
	1.4.3	Waar		
	1.4.4	Onwaar		
	1.4.5	Waar		
			(5 × 1)	(5)
1.5	1.5.1	Stel		
	1.5.2	Demultipleksering		
	1.5.3	Bandwydte		
	1.5.4	Alfanumeries		
	1.5.5	Kode		
			(5 × 1)	(5)
1.6	1.6.1	Opteller		
	1.6.2	NEN		
	1.6.3	T-tipe		
	1.6.4	Niegeweegde		
	1.6.5	Gelyke		
			(5 × 1)	(5)
				[30]

Kopiereg voorbehou

VRAAG 2

2.1 2.1.1 AD,716 = 10101101,0111✓
01010010,1000
+1
01010010,1001✓
65,58 = 00110101,1010✓
11001010,0101
+1
11001010,0110✓

01010010,1001
+11001010,0110
00011100,1111✓
= 28,937510✓

2.1.2 BF,C16 = 10111111,1100✓
01000000,0011
+1
01000000,0100✓
DB,916 = 11011011,1001✓
00100100,0110
+1
00100100,0111✓

01000000,0100
+ 00100100,0111
01100100,1011✓
10011011,0100
+1
10011011,0101
= 155,312510✓

(2 × 6) (12)

2.2 2.2.1 A9,716 = 10101001,0111✓
7,58 = 111,1010✓

1010,001 = 10,12510✓✓
1111010 ⟌ 1010100101111000
-1111010
0010111101
-1111010 ✓
10000111
-1111010
00011011000
-1111010 ✓
1011110

2.2.2 E4,316 = 11100100,0011✓
25,38 = 010101,011✓

111001000011
10101011
111001000011 ✓
111001000011
000000000000
111001000011
000000000000
111001000011
000000000000
111001000011 ✓
1001100001101,100001 ✓
= 4 877,507812510✓

(2 × 6) (12)

2.3 2.3.1 2421 2421 2421
1110 1100 1011✓
1110110,1011✓

2.3.2 4221 4221 4221
1110 1100 0111✓
11101100,0111✓

2.3.3 5211 5211 5211
1101 1001 1000✓
11011001,1000✓

(3 × 2) (6)
[30]

VRAAG 3

3.1 3.1.1

$\overline{A}\,\overline{B} + A\,\overline{B}\,\overline{D} + D$

$\overline{A}\,\overline{B} + A\,\overline{B} + D$✓

$\overline{B}\,(A + \overline{A}) + D$✓

$\overline{B} + D$✓✓ (4)

3.1.2

$AB\overline{C}D + ABC\overline{D} + \overline{A}\,\overline{B}\,\overline{C}\,D + \overline{A}\,\overline{B}\,C\,\overline{D}$

$AB\,(\overline{C}D + C\overline{D}) + \overline{A}\,\overline{B}\,(\overline{C}D + C\overline{D})$✓

$AB\,(C \oplus D) + \overline{A}\,\overline{B}\,(C \oplus D)$✓✓

$(A\,B + \overline{A}\,\overline{B})\,(C \oplus D)$✓

$\overline{A \oplus B}.\ C \oplus D$✓✓ (6)

3.2

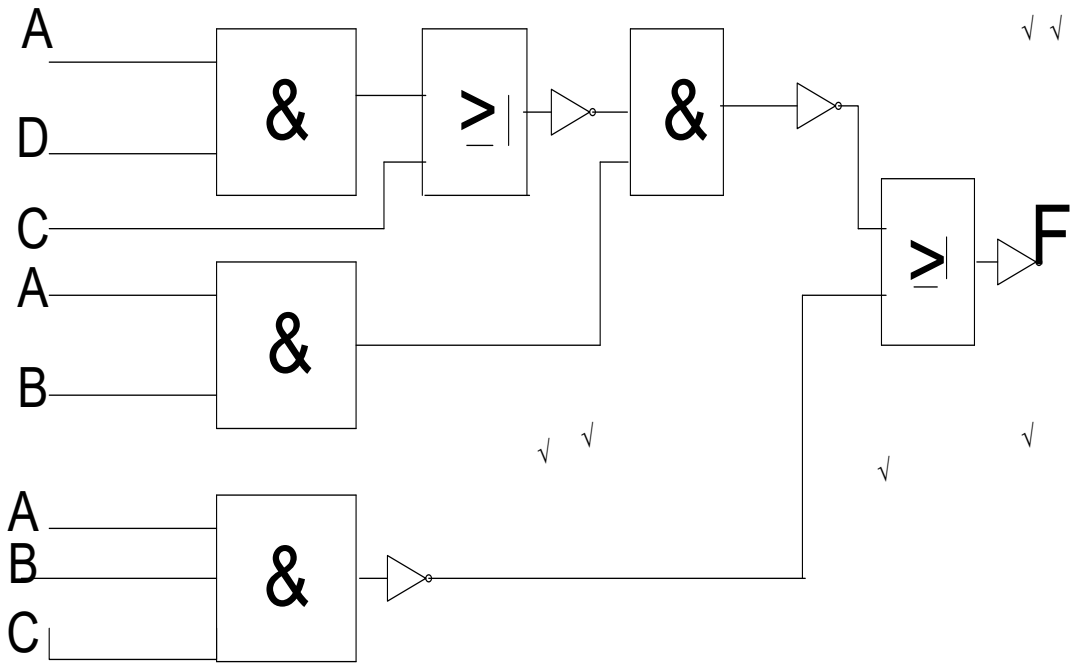

(6)
[16]

VRAAG 4

4.1

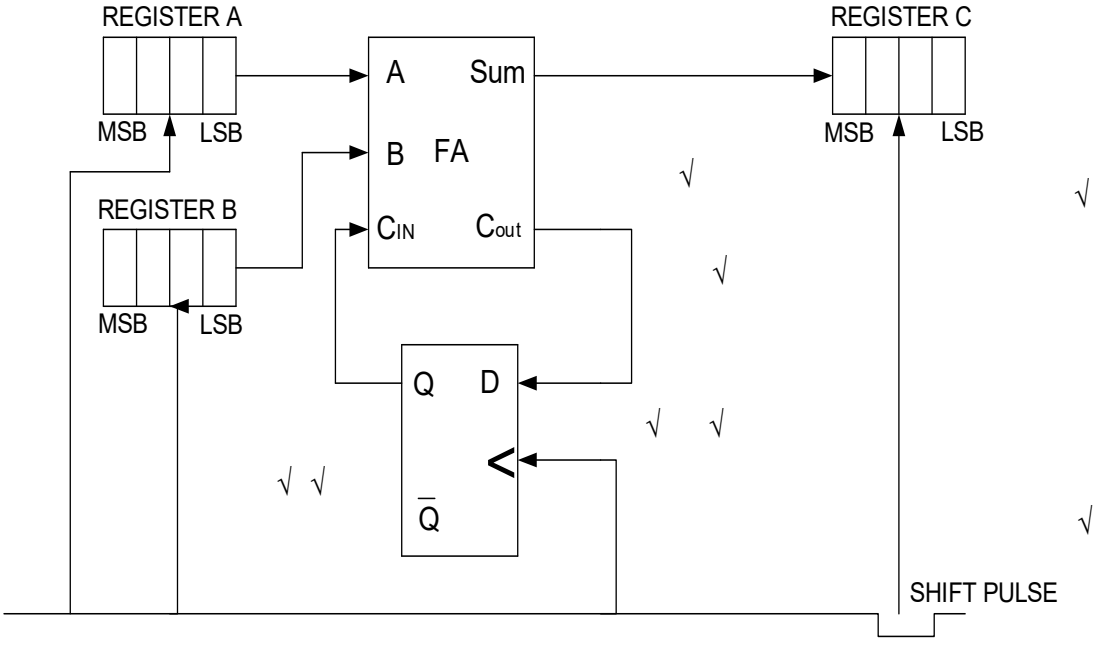

(8)

4.2

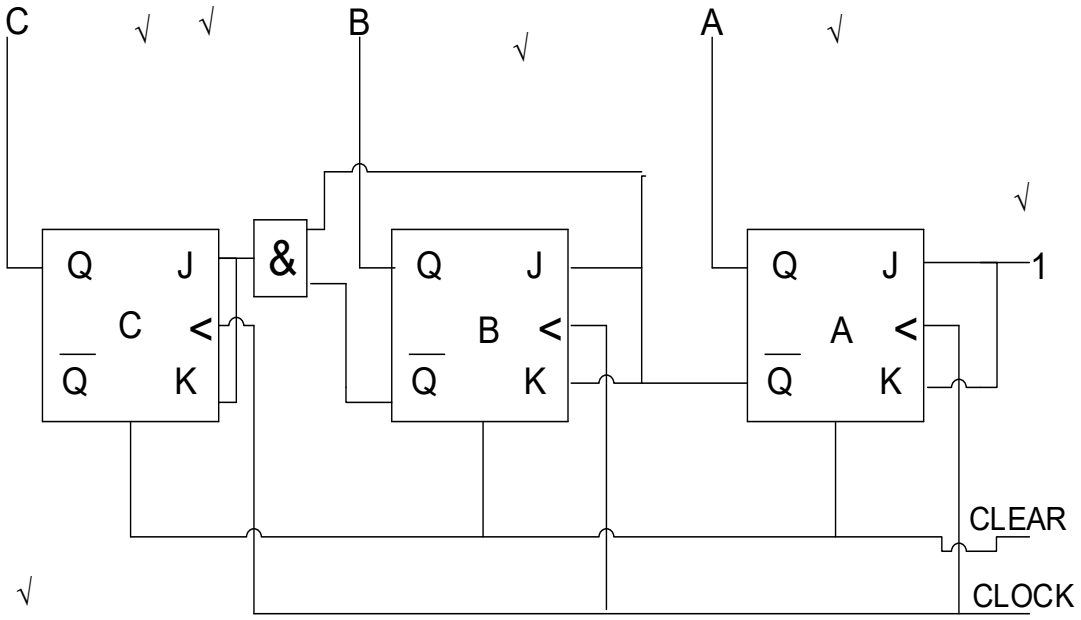

(6)
[14]

VRAAG 5

5.1

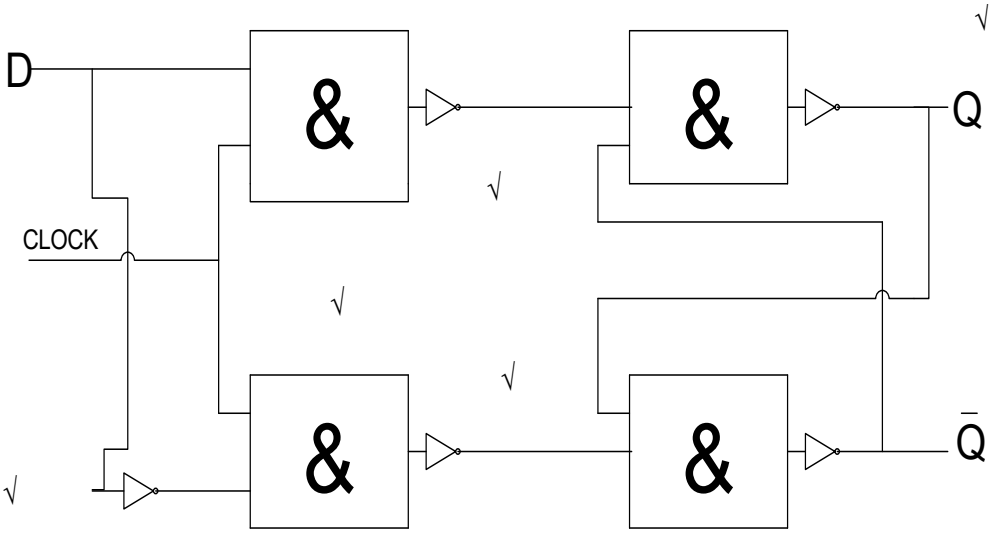

(5)

5.2

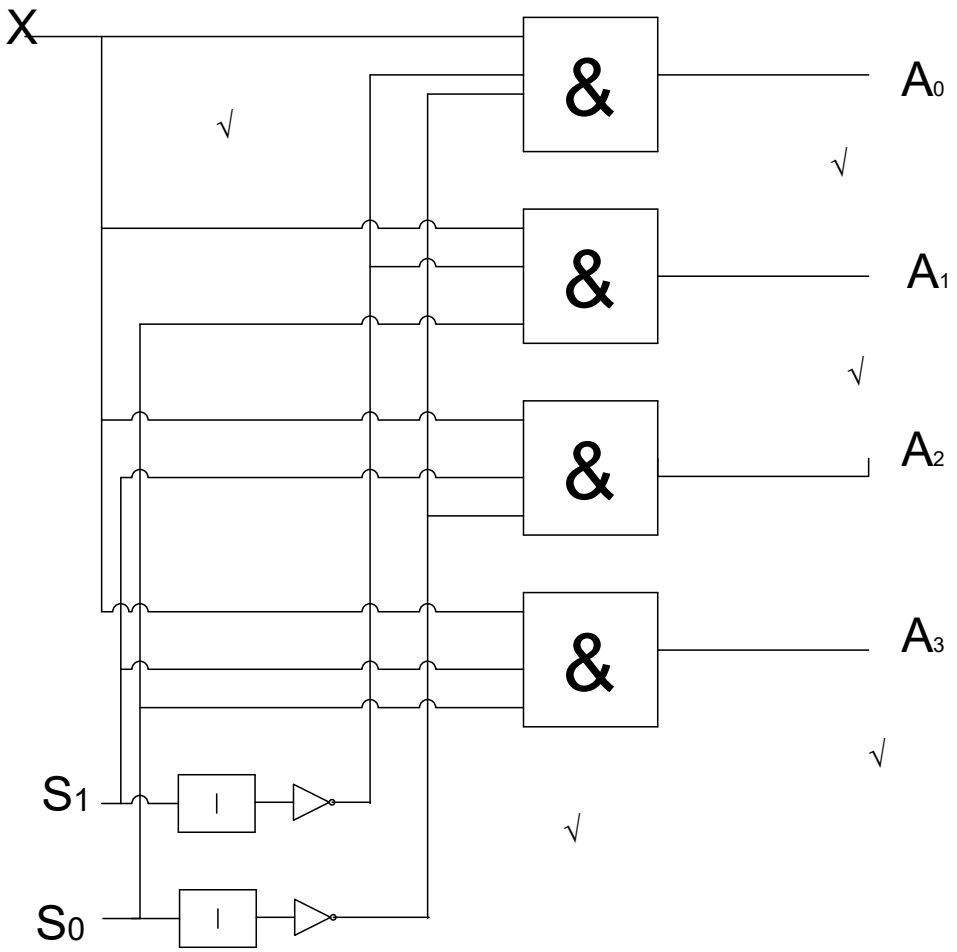

(5)
[10]

TOTAAL: 100

Kopiereg voorbehou