higher education & training

Department:
Higher Education and Training
REPUBLIC OF SOUTH AFRICA

# MARKING GUIDELINE

## NATIONAL CERTIFICATE

## DIGITAL ELECTRONICS N4

**29 November 2019**

**This marking guideline consists of 8 pages.**

Copyright reserved

## QUESTION 1

1.1
1.1.1 A
1.1.2 C
1.1.3 D
1.1.4 D
1.1.5 A

(5 × 1) (5)

1.2
1.2.1 C
1.2.2 D
1.2.3 F
1.2.4 B
1.2.5 A

(5 × 1) (5)

1.3
1.3.1 True
1.3.2 True
1.3.3 False
1.3.4 True
1.3.5 True

(5 × 1) (5)

1.4
1.4.1 100111 = 011000
~~+1~~
011001
11001

1.4.2 10011 = 11010Gray

1.4.3 $D_{16} = 1101_2$
$B_{16} = 1010_2$

1101
+1010
10111

(3 × 2) (6)
**[21]**

## QUESTION 2

2.1 D, $7_{16}$ = 1101, 0111

3, $6_8$ = 0011, 1100 = 1100, 0011

1101, 0111
1100, 0011
1001, 1010
+1
1001, 1011
=9, $6875_{10}$

2.2 7C, $B_{16}$ = 01111100, 1011

$6,5_8$ = 110, 101

10010,110
1101010 √ 11111001011000
-1101010
10010101
-1101010
10101110
-1101010
10001000
-1101010
111100
=22, $6_8$

2.3 $86,E_{16}$ = 10000110, 1110

$7, 5_{10}$ = 111, 1

100001101110
1111
100001101110
100001101110
100001101110
100001101110
1111110011, 10010
= 3F3, $9_{16}$

(3 × 6) **[18]**

**QUESTION 3**

3.1 $F = A B \overline{C} + A \overline{B} \overline{C} + ABC + A \overline{B} \overline{C}$

$A (\overline{B} C + B \overline{C}) + \overline{A} (B\overline{C} + \overline{B} C)$

$A \overline{(B \oplus C)} + \overline{A} (B \oplus C)$

LET $B \oplus C = K$

$A \overline{K} + \overline{A} K$

$A \oplus K$

$A \oplus B \oplus C$

3.2 $\overline{\overline{A} \overline{B} + \overline{A} B + A \overline{B}}$

$\overline{(\overline{A} B)} \; \overline{(\overline{A} B)} \; \overline{(A \overline{B})}$

$(A + \overline{B}) (A + \overline{B}) (\overline{A} + B)$

$AA + A\overline{B} + A\overline{B} + \overline{B} \; \overline{B} (\overline{A} + B)$

$A (1 + \overline{B} + \overline{B}) + \overline{B} (\overline{A} + B)$

$A + \overline{B} ( \overline{A} + B )$

$A \overline{A} + A B + \overline{A} \overline{B} + B \overline{B}$

$AB$

Copyright reserved 

3.3

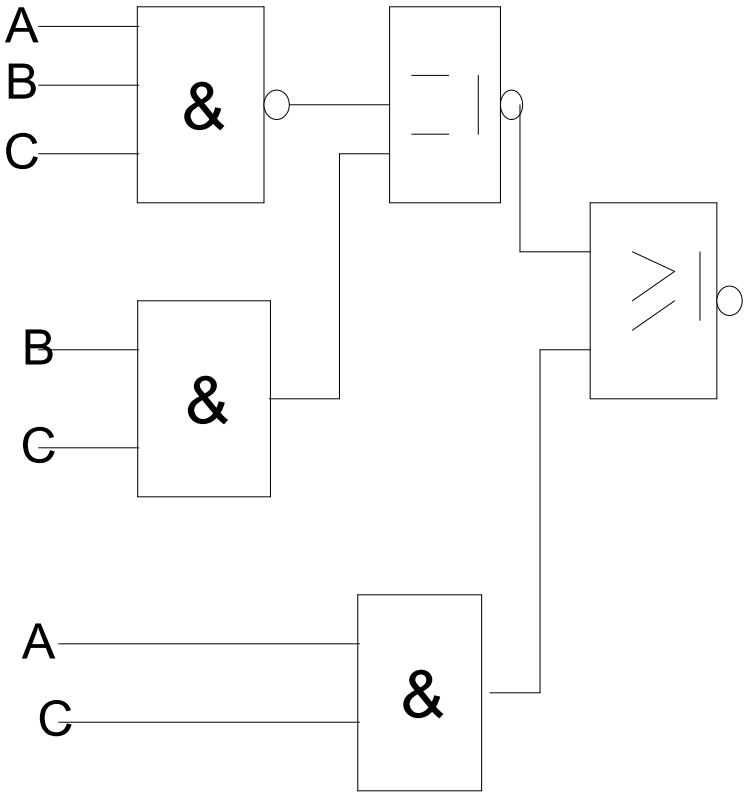


3.4

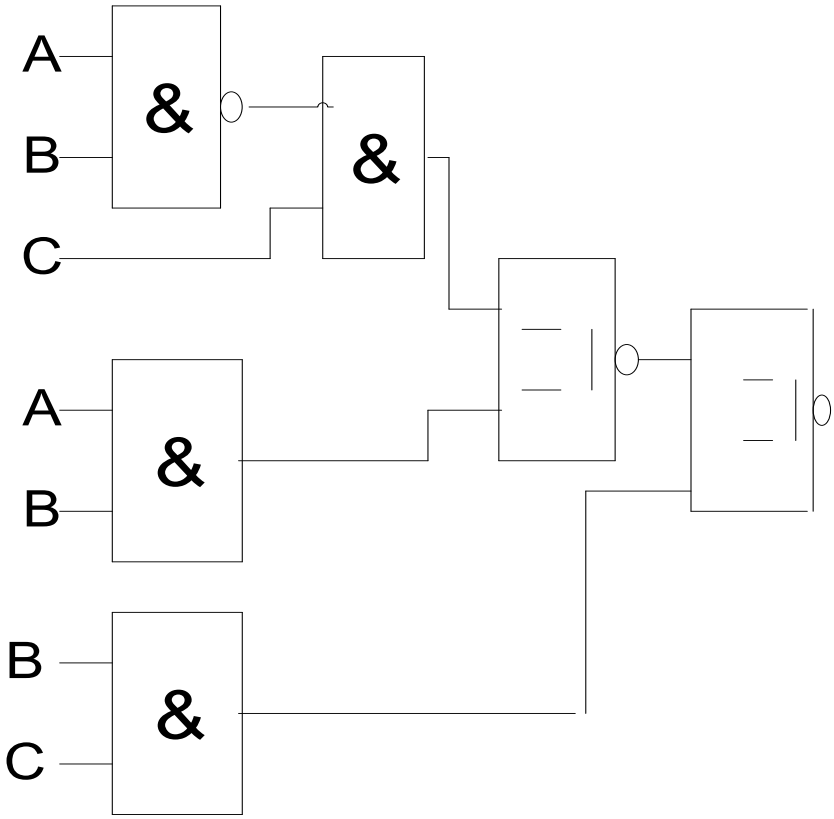


(4 × 6) **[24]**

## QUESTION 4

4.1

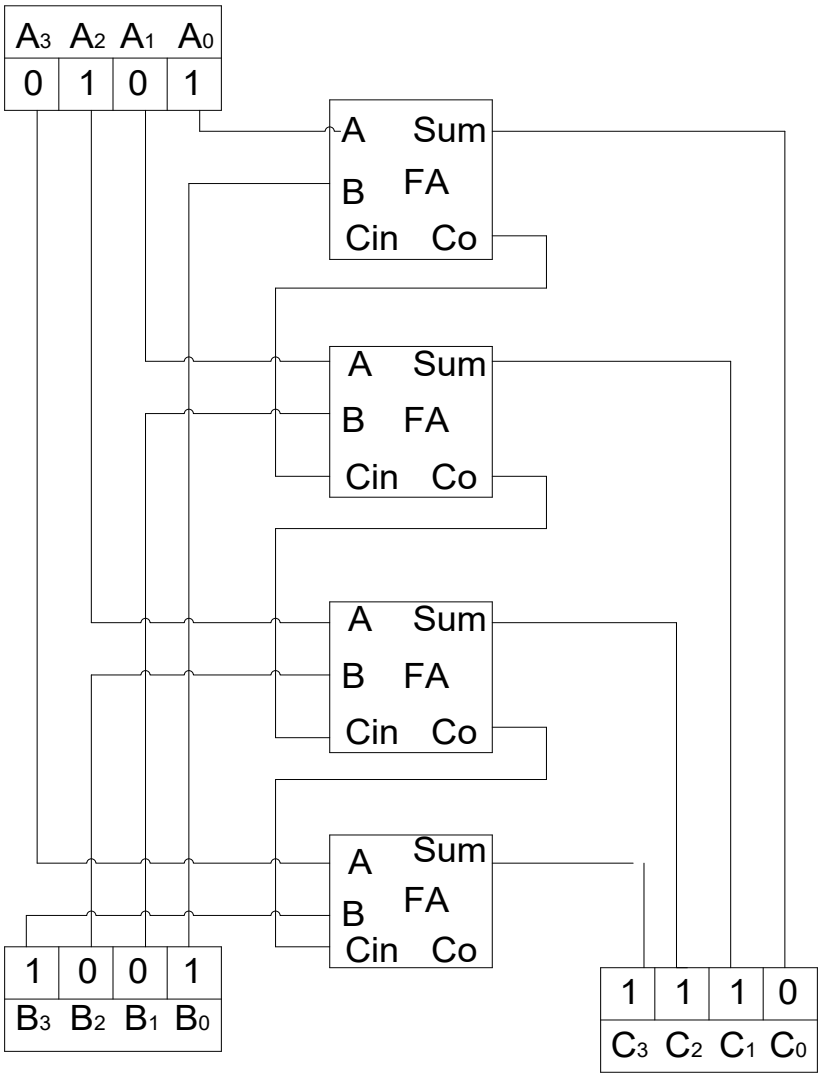


(10)

4.2

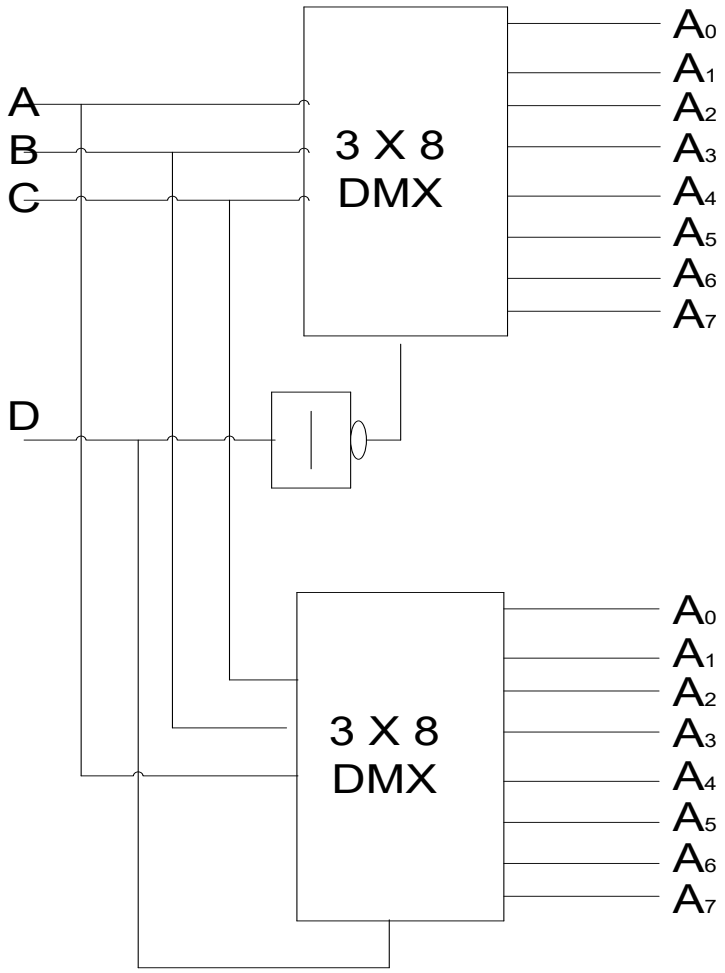


(9)
**[19]**

**QUESTION 5**

5.1

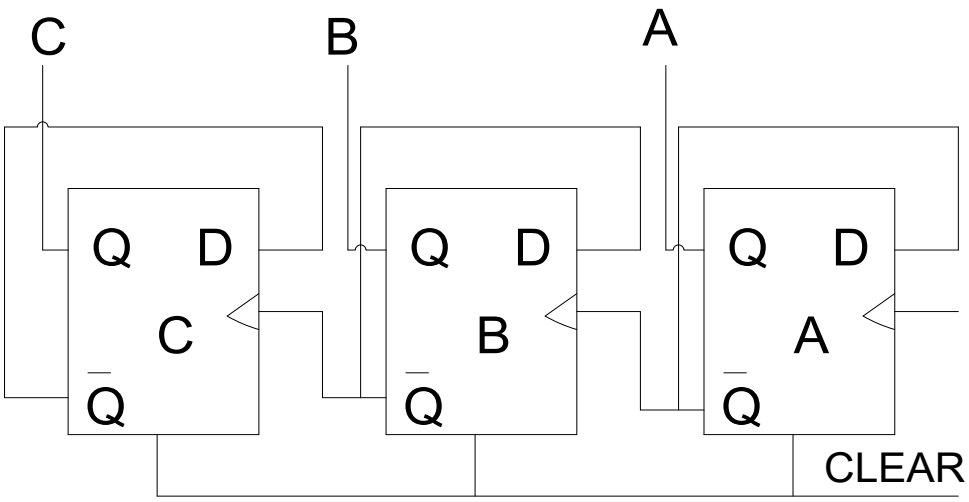


(8)

5.2

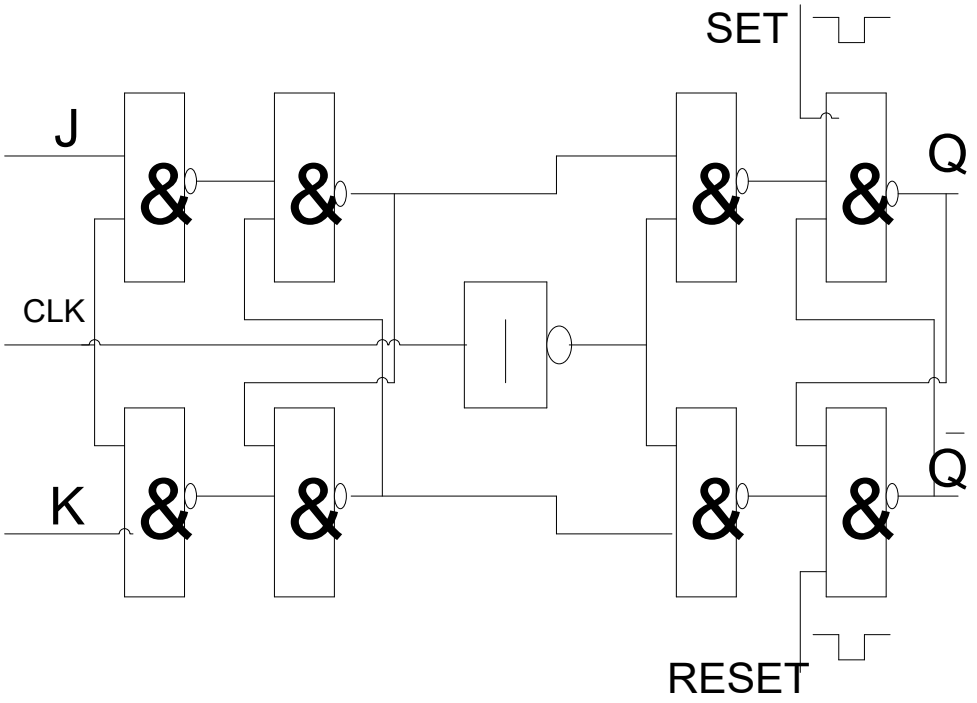


(10)
**[18]**

**TOTAL: 100**

Copyright reserved