higher education & training

Department:
Higher Education and Training
REPUBLIC OF SOUTH AFRICA

MARKING GUIDELINE

NATIONAL CERTIFICATE

NOVEMBER EXAMINATION

DIGITAL ELECTRONICS N4

28 NOVEMBER 2016

This marking guideline consists of 8 pages.

Copyright reserved

QUESTION 1

1.1 0, 1, 2, 3, 4, 5, 6, 7, 8, 9, A, B, C, D, E, F (1)

1.2 9 (1)

1.3 It was a non-weighed positional code. (2)

1.4 X-3 BKD (1)

1.5 $1001,101_2$ 1's complement = $0110,010_2$ (1)

1.6

A	B	Q
0	0	0
0	1	1
1	0	1
1	1	0

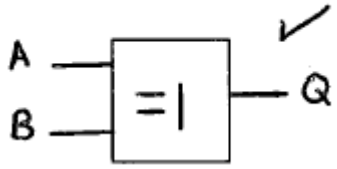

$Q = A \oplus B$ ✓

(3)

1.7 1.7.1 1
1.7.2 $A.\overline{B}$
1.7.3 1
1.7.4 1

(4 × 1) (4)

1.8 In asynchronous counters the output of the previous flip-flop clocks the next one but synchronous counters are clocked simultaneously.✓

Synchronous counters are faster than asynchronous ones.✓ (2)

1.9 1.9.1

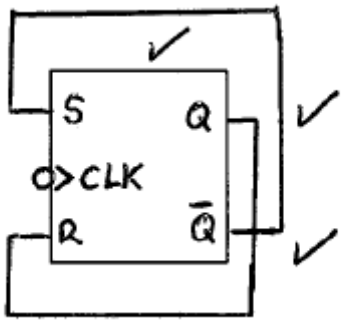

1.9.2

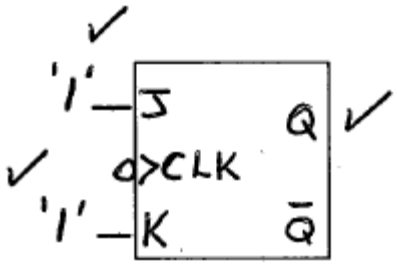

1.9.3

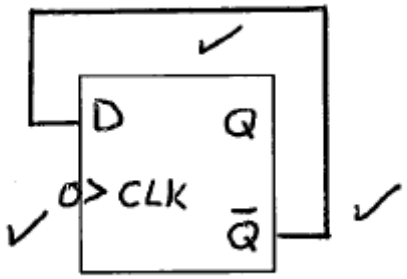

(3 × 3) (9)
[24]

QUESTION 2

2.1 2.1.1 $14{,}5_8 = 1100{,}101_2$✓
$E{,}61_6 = 1110{,}0110_{2\ 1\text{'s compl.}}$✓

No carry get 1's compl. Sign neg.

1100,1010
0001,1001✓
1110,0011✓

0001,1100✓

$= -1{,}75_{10}$✓

2.1.2 $2C{,}5_{16} = 101100{,}0101_2$✓
$6{,}25_{10} = 110{,}01_2$✓

```
                 111,0001 ✓
110010 √ 1011000101,0000
         110010
         01001101  ✓
           110010
            00110110
              110010  ✓
              0001001000
```

$= 7{,}04_8$ ✓

2.1.3 $12,125_{10} = 1100,001_2$ ✓
$5,4_8 = 101,100_2$ ✓

$$\begin{array}{r} 1100,001 \\ \underline{\times 101,1} \\ 1100\ 001 \checkmark \\ 1100\ 001 \checkmark \\ \underline{1100\ 001000} \checkmark \\ 1000010,1011 \end{array}$$

$= \mathbf{102,54_8}$ ✓

(3 × 6) (18)

2.2 ✓ ✓

A	B	So	Co
0	0	0	0
0	1	1	0
1	0	1	0
1	1	0	1

(2)

2.3 2.3.1 0100 1101, 1111_{2421}

2.3.2 0111 0101, 1100_{x-3}

(2 × 3) (6)
[26]

VRAAG 3

3.1

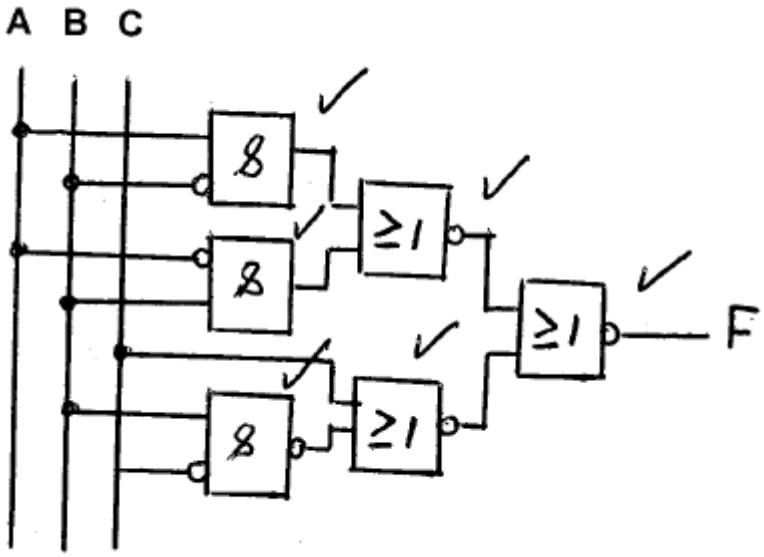

(6)

3.2 3.2.1

$$\overline{(AB + C)(\overline{A}.C + B)(B + \overline{C})} = F$$

$(A.B + C)(\overline{A}.C + B)(B + \overline{C})$ ✓

$(0 + AB + \overline{A}.C + BC((B + \overline{C})$ ✓

$AB + AB\overline{C} + \overline{A}BC + 0 + BC + 0$ ✓

$AB + BC$ ✓

to...nands../ ..na..nen

$\overline{\overline{AB + BC}}$

$\overline{\overline{AB}.\overline{BC}}$ ✓

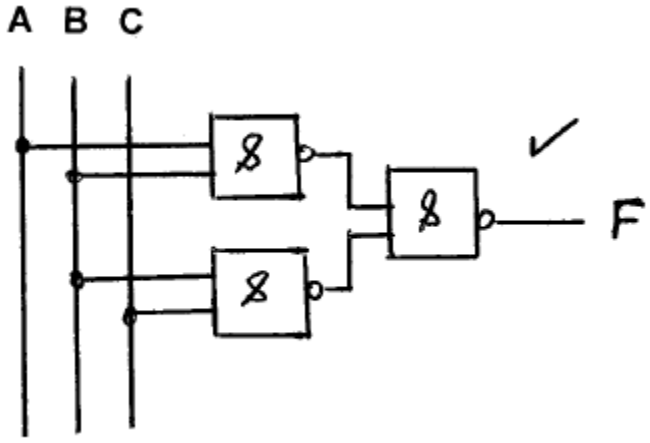

3.2.2

$$\overline{(A.B.\overline{C} + A.B.C).\overline{(\overline{A}.B.C + A.\overline{B}.C)}} = F$$

$A.B.\overline{C} + A.B.C + \overline{A}.B.C + A.\overline{B}.C$ ✓

$A.B(C + C) + \overline{A}.B.C + A.\overline{B}.C$

$A.B + \overline{A}.B.C + A.\overline{B}.C$

$A(B + \overline{B}.C) + \overline{A}.B.C$ ✓

$A(B + C) + \overline{A}.B.C$

$A.B + A.C + \overline{A}.B.C$

$A.B + C(A + \overline{A}.B)$ ✓

$A.B + C(A + B)$

$A.B + A.C + B.C$ ✓

To...Nands...naNen

$\overline{\overline{A.B} + \overline{A.C} + \overline{B.C}}$

$\overline{\overline{A.B}.\overline{A.C}.\overline{B.C}}$ ✓

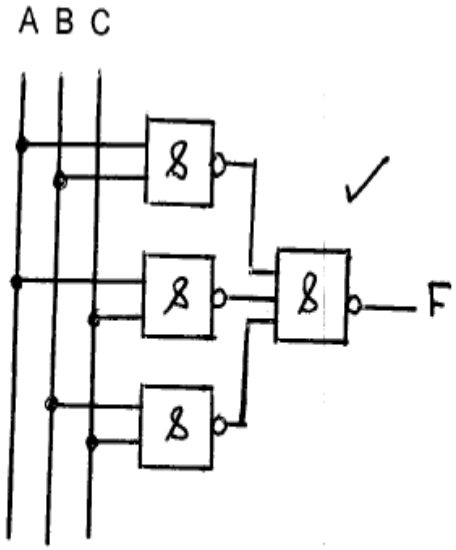

✓

..... (2 × 6) (12)
[18]

QUESTION 4

4.1

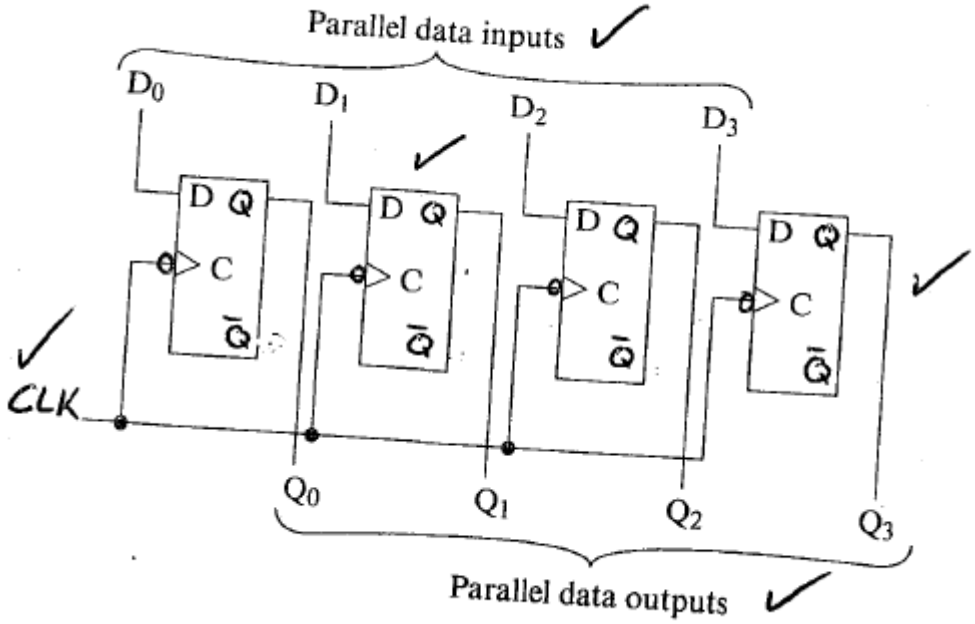

(5)

4.2

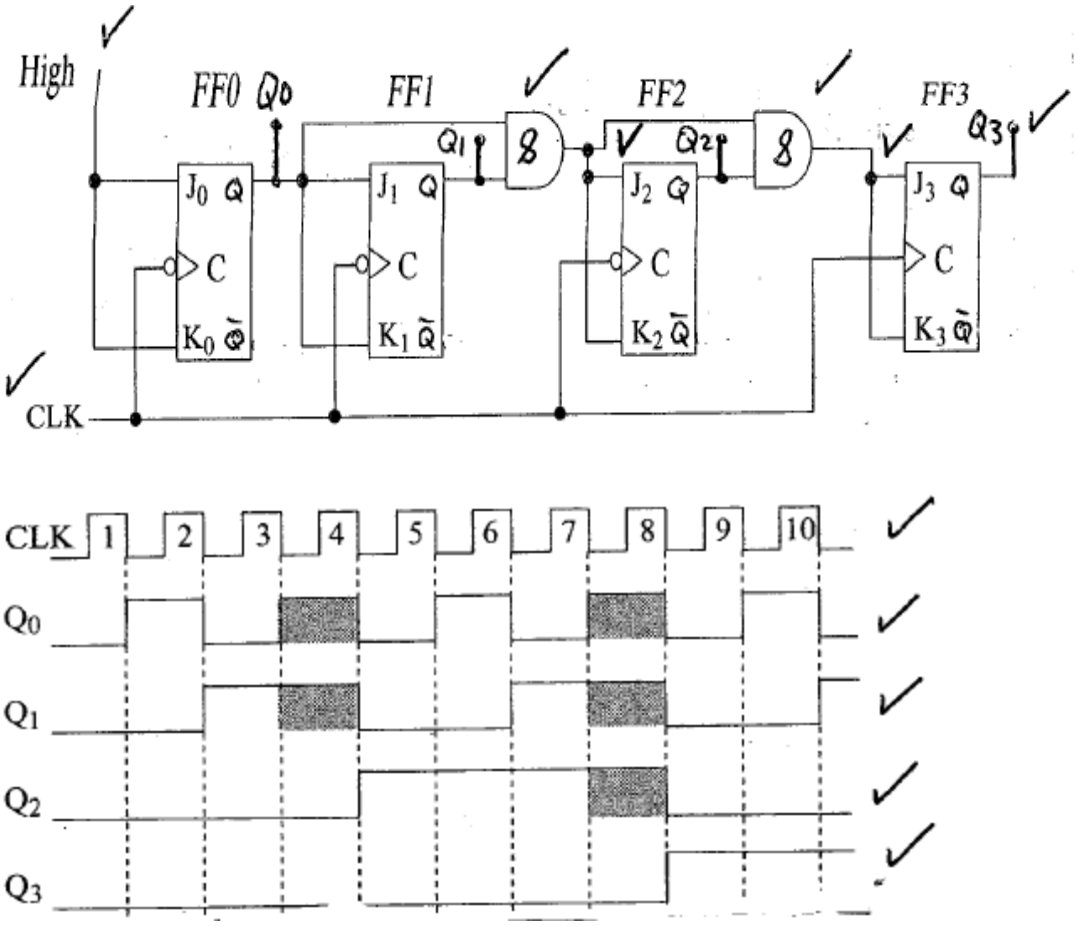

(12)
[17]

QUESTION 5

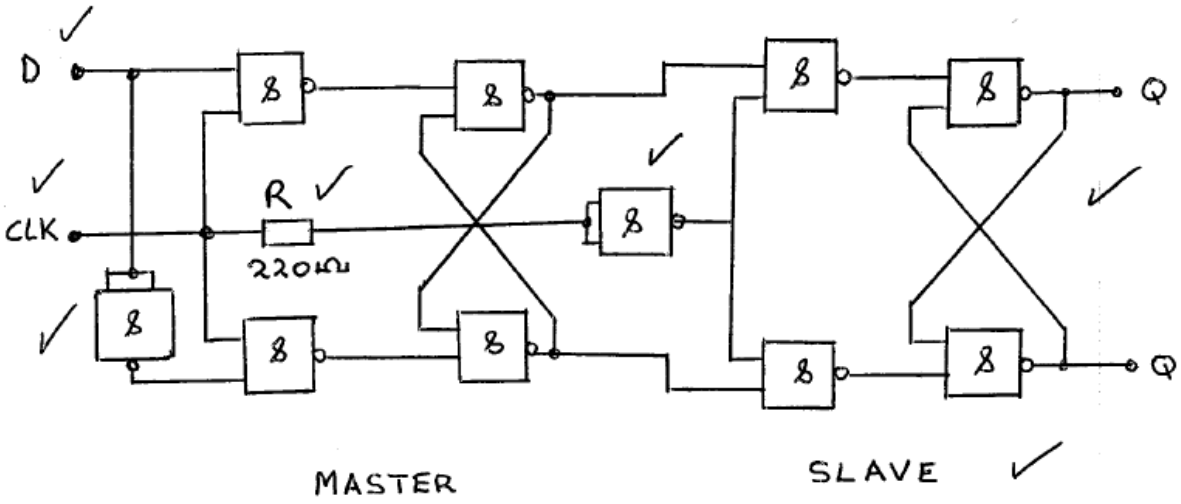

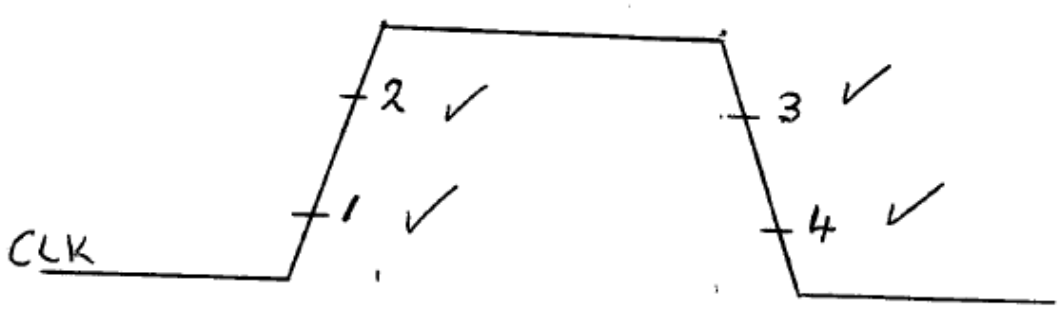

1. Master closed/Slave closed✓
2. Master open/Slave closed✓
3. Master closed/Slave closed✓
4. Master closed/Slave open✓

[15]

TOTAL: 100

Copyright reserved