higher education & training

Department:
Higher Education and Training
REPUBLIC OF SOUTH AFRICA

# MARKING GUIDELINE

## NATIONAL CERTIFICATE

## DIGITAL ELECTRONICS N4

## 19 April 2021

**This marking guideline consists of 7 pages.**

Copyright reserved

## QUESTION 1

| | | | | |
|---|---|---|---|---|
| 1.1 | 1.1.1 | C | | |
| | 1.1.2 | C | | |
| | 1.1.3 | D | | |
| | 1.1.4 | C | | |
| | 1.1.5 | A | | |
| | | | (5 × 1) | (5) |
| 1.2 | 1.2.1 | Equality | | |
| | 1.2.2 | OR | | |
| | 1.2.3 | Double- | | |
| | 1.2.4 | Hamming | | |
| | 1.2.5 | Base | | |
| | | | (5 × 1) | (5) |
| 1.3 | 1.3.1 | B | | |
| | 1.3.2 | A | | |
| | 1.3.3 | D | | |
| | 1.3.4 | E | | |
| | 1.3.5 | C | | |
| | | | (5 × 1) | (5) |
| 1.4 | 1.4.1 | False | | |
| | 1.4.2 | True | | |
| | 1.4.3 | True | | |
| | 1.4.4 | False | | |
| | 1.4.5 | True | | |
| | | | (5 × 1) | (5) |
| 1.5 | 1.5.1 | Set | | |
| | 1.5.2 | Demultiplexing | | |
| | 1.5.3 | Bandwidth | | |
| | 1.5.4 | Alphanumeric | | |
| | 1.5.5 | Code | | |
| | | | (5 × 1) | (5) |
| 1.6 | 1.6.1 | Up-counter | | |
| | 1.6.2 | NAND | | |
| | 1.6.3 | T-type | | |
| | 1.6.4 | Non-weighted | | |
| | 1.6.5 | Even | | |
| | | | (5 × 1) | (5) |
| | | | | **[30]** |

## QUESTION 2

2.1 2.1.1 AD,716 = 10101101,0111✓
01010010,1000
+1
01010010,1001✓
65,58 = 00110101,1010✓
11001010,0101
+1
11001010,0110✓

01010010,1001
+11001010,0110
00011100,1111✓
= 28,937510✓

2.1.2 BF,C16 = 10111111,1100✓
01000000,0011
+1
01000000,0100✓
DB,916 = 11011011,1001✓
00100100,0110
+1
00100100,0111✓

01000000,0100
+ 00100100,0111
01100100,1011✓
10011011,0100
+1
10011011,0101
= 155,312510✓

(2 × 6) (12)

2.2 2.2.1 A9,716 = 10101001,0111✓
7,58 = 111,1010✓

1010,001 = 10,12510✓✓
1111010 ⟌ 1010100101111000
-1111010
0010111101
-1111010 ✓
10000111
-1111010
00011011000
-1111010 ✓
1011110

2.2.2 E4,316 = 11100100,0011✓
25,38 = 010101,011✓

111001000011
10101011
111001000011 ✓
111001000011
000000000000
111001000011
000000000000
111001000011
000000000000
111001000011 ✓
1001100001101,100001 ✓
= 4 877,507812510✓

(2 × 6) (12)

2.3 2.3.1 2421 2421 2421
1110 1100 1011✓
1110110,1011✓

2.3.2 4221 4221 4221
1110 1100 0111✓
11101100,0111✓

2.3.3 5211 5211 5211
1101 1001 1000✓
11011001,1000✓

(3 × 2) (6)
**[30]**

**QUESTION 3**

3.1 3.1.1

$\overline{A}\,\overline{B} + A\,\overline{B}\,\overline{D} + D$

$\overline{A}\,\overline{B} + A\,\overline{B} + D$✓

$\overline{B}\,(A + \overline{A}) + D$✓

$\overline{B} + D$✓✓ (4)

3.1.2

$AB\overline{C}D + ABC\overline{D} + \overline{A}\,\overline{B}\,\overline{C}\,D + \overline{A}\,\overline{B}\,C\,\overline{D}$

$AB\,(\overline{C}D + C\overline{D}) + \overline{A}\,\overline{B}\,(\overline{C}D + C\overline{D})$✓

$AB\,(C \oplus D) + \overline{A}\,\overline{B}\,(C \oplus D)$✓✓

$(A\,B + \overline{A}\,\overline{B})\,(C \oplus D)$✓

$\overline{A \oplus B}.\ C \oplus D$✓✓ (6)

3.2

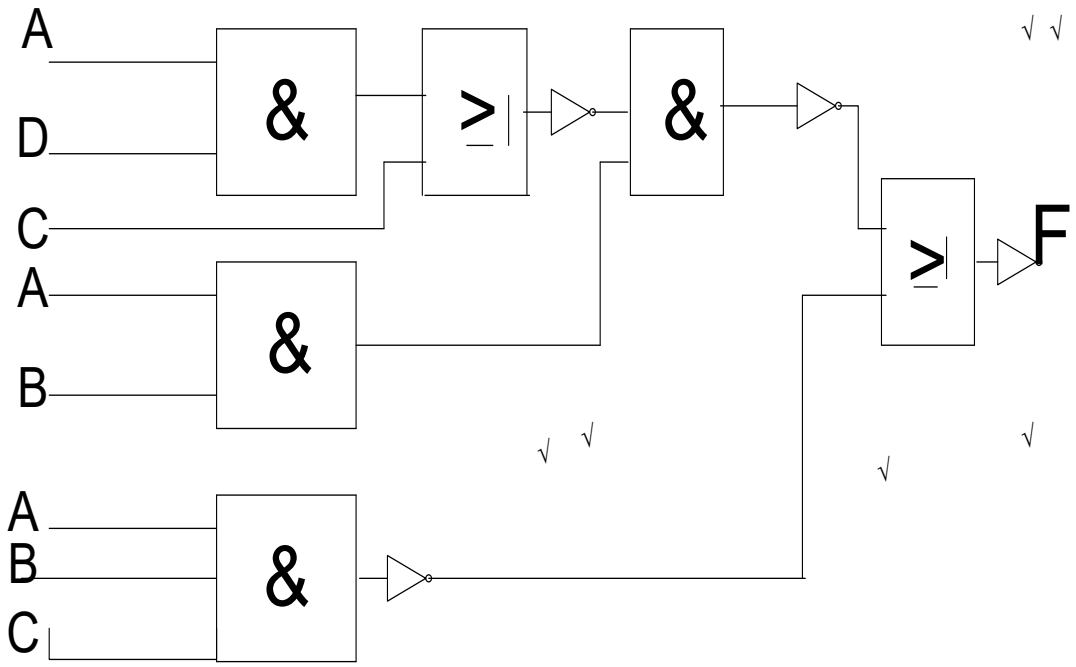


(6)
**[16]**

**QUESTION 4**

4.1

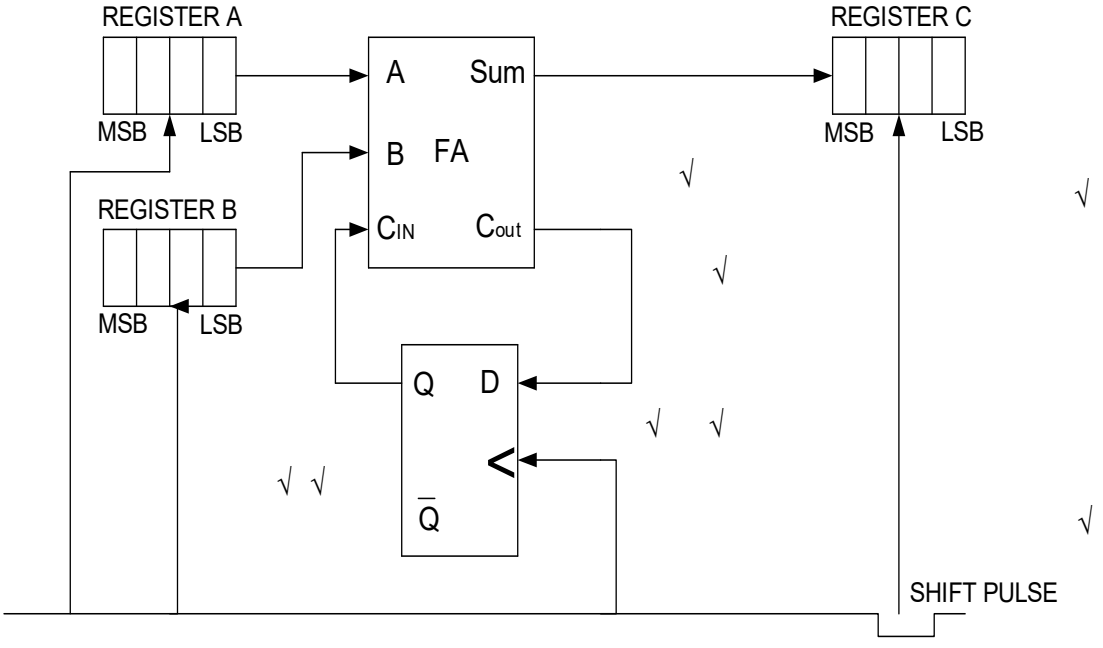


(8)

4.2

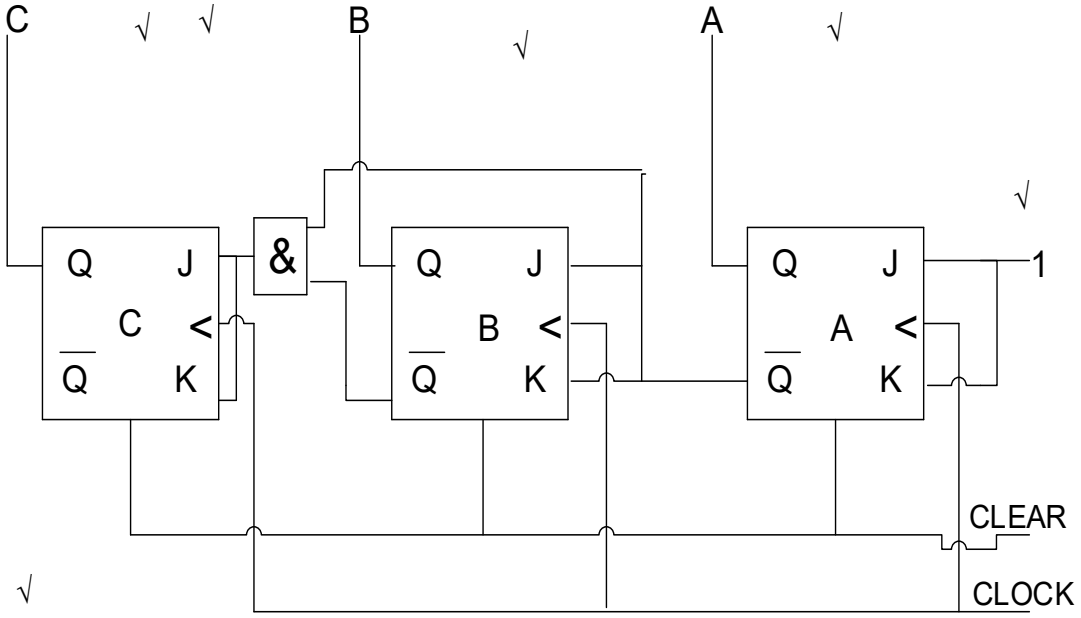


(6)
**[14]**

**QUESTION 5**

5.1

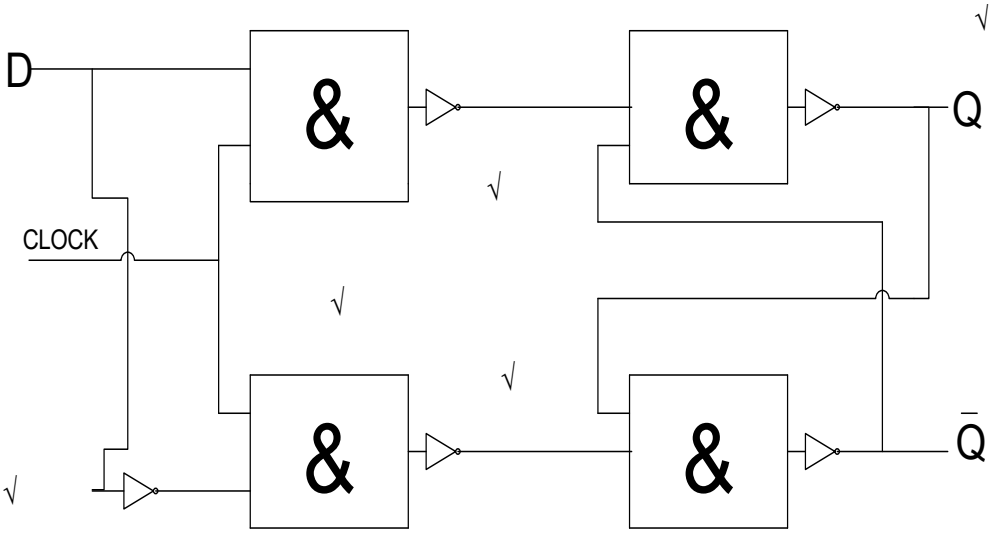


(5)

5.2

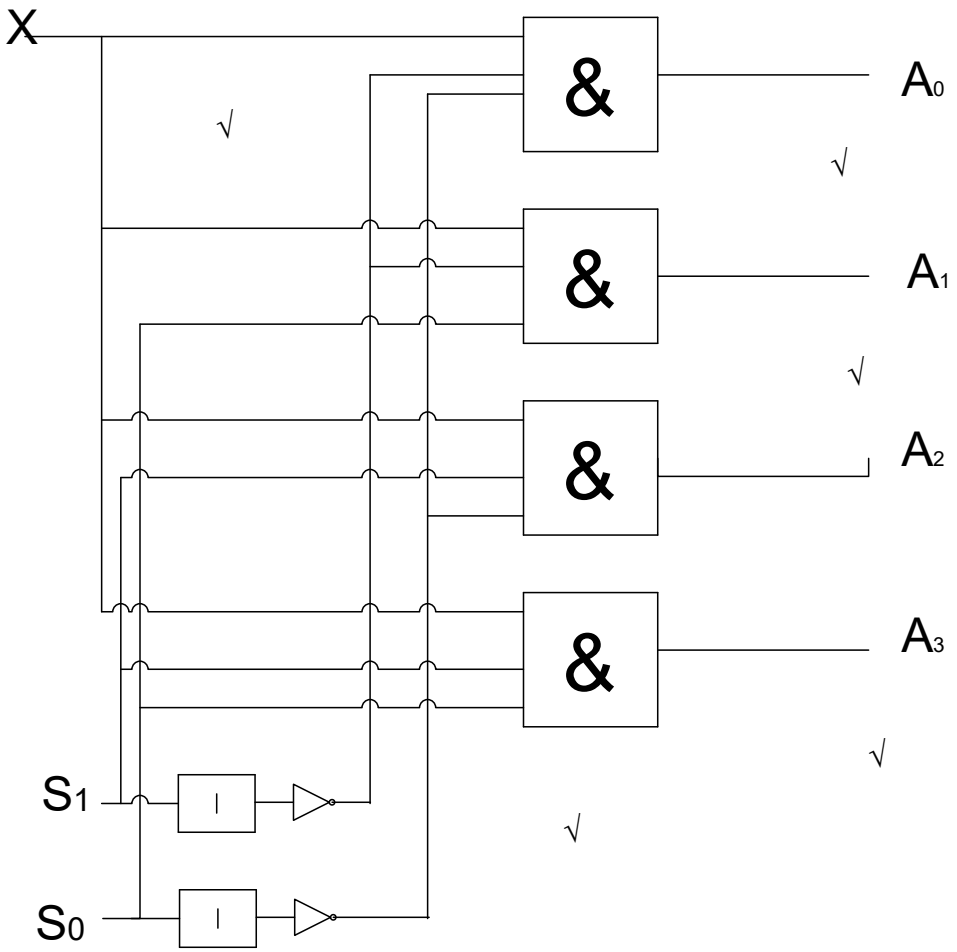


(5)
**[10]**

**TOTAL: 100**

Copyright reserved