higher education & training

Department:
Higher Education and Training
REPUBLIC OF SOUTH AFRICA

MARKING GUIDELINE

NATIONAL CERTIFICATE

DIGITAL ELECTRONICS N4

9 APRIL 2018

This marking guideline consists of 7 pages.

Copyright reserved

QUESTION 1

1.1 The radix is 10. (1)

1.2 All components in a computer operate in two states, namely the on state and the off state. (2)

1.3 A weighted code is one in which a fixed value is allocated to each bit.✓✓
Example: 8421, 2421, 7421, 5211, 4221✓ (Any 1) (3)

1.4 3 (1)

1.5 It is the time it takes a sequel to move through a system. (2)

1.6
1.6.1 X
1.6.2 ABC
1.6.3 1
1.6.4 A + B
1.6.5 B + A
(5 × 1) (5)

1.7
8421 8421 8421
0110 0110 1101✓
6 6 13
-3 -3 -3
3 3 10 ✓
= 33 A✓ (3)
[17]

QUESTION 2

2.1 $FE,7_{16} = 11111110,0111_2$✓
$1D,5_{16} = 00011101,0101_2$✓

= 00011101.0101 2nd complement = 11100010,1010
+1
11100010,1011✓

Carry1
11111110,0111
+ 11100010,1011
11100001,0010✓✓

Therefore $1110001,0010 = 225,125_{10}$✓ (6)

2.2 2.2.1 $3A,E7_{16} = 00111010,11100111_2$✓
$15,0625_{10} = 1111,0001_2$✓

```
        11101011100111
              11110001✓
      ------------------
        11101011100111
       00000000000000
      00000000000000
     00000000000000
    11101011100111
   11101011100111
  11101011100111
 110011111,111111100111₂✓✓
```

Therefore $110011111,111111100111_2 = 637,7747_8$✓ (6)

2.2.2 $1010110,1 \div 11011_2$

```
                 11,001 ✓✓
110110 √10101101000
       - 110110
          1000001
         -110110
            1011000
           -110110
             100010✓✓✓
```

Therefore $11,001_2 = 3,1_8$✓ (6)

2.2.3 $-17,25_{10} = 010001,01_2$ 1's complement 101110,10✓

$-12,5_{10} = 001100,10_2$ 1's complement 110011,01✓

```
Carry1   101110,10
         110011,01
         ---------
         100001,11
               +1
         ---------
         100010,00 ✓
         ---------
         011101,11 ✓
```

Therefore $11101,11_2 = -29,75_{10}$✓✓ (6)
[24]

QUESTION 3

3.1 3.1.1

$F = AB\bar{C}B + ABC\bar{D} + \bar{A}\bar{B}\bar{C}D + \bar{A}\bar{B}C\bar{D}$
$= AB\bar{C}D + ABC\bar{D} + \bar{A}\bar{B}\bar{C}D + \bar{A}\bar{B}C\bar{D}$
$= AB(C \oplus D) + \bar{A}\bar{B}(C \oplus D)$ ✓
Let $C \oplus D = K$ ✓
$= ABK + \bar{A}\bar{B}K$ ✓
$= (AB + \bar{A}\bar{B})K$ ✓
$= (A \oplus B)K$ ✓
$= (A \oplus B)(C \oplus D)$ ✓ (6)

3.1.2

$F = C(A + \bar{B}) + A(B + \bar{C}) + \bar{A}B$
$= AC + \bar{B}C + AB + A\bar{C} + \bar{A}B$ ✓✓
$= A(C + \bar{C}) + B(A + \bar{A}) + \bar{B}C$ ✓✓
$= A + B + \bar{B}C$ ✓
$= A + B + C$ ✓ (6)

3.2 3.2.1

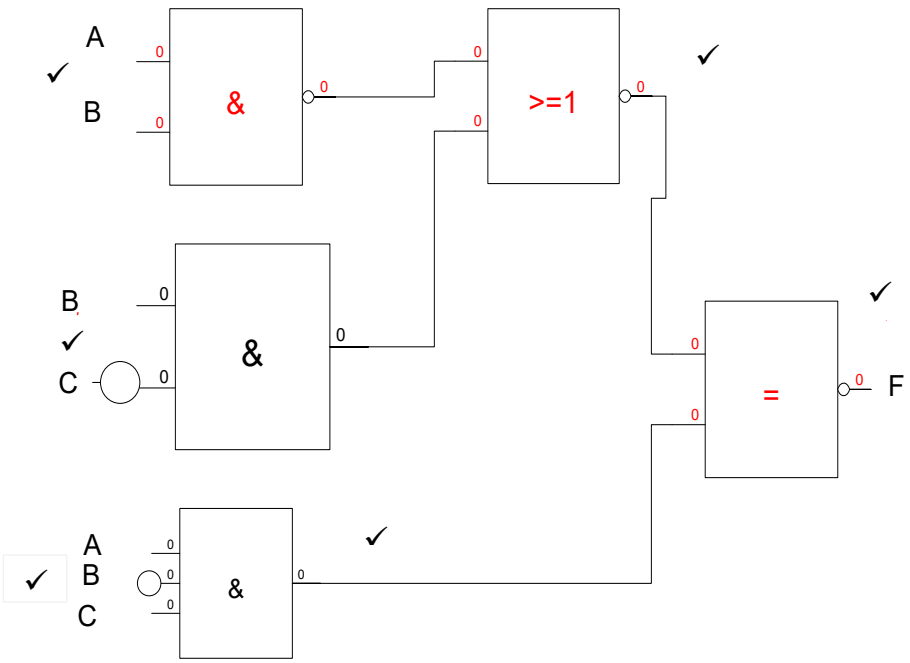

(6)

3.2.2

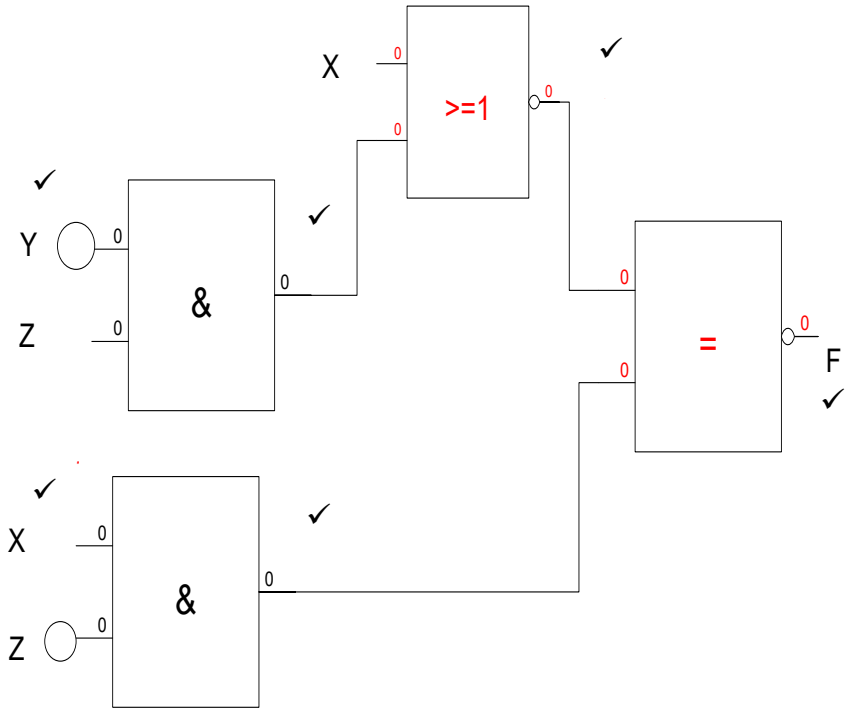

(6)
[24]

QUESTION 4

4.1

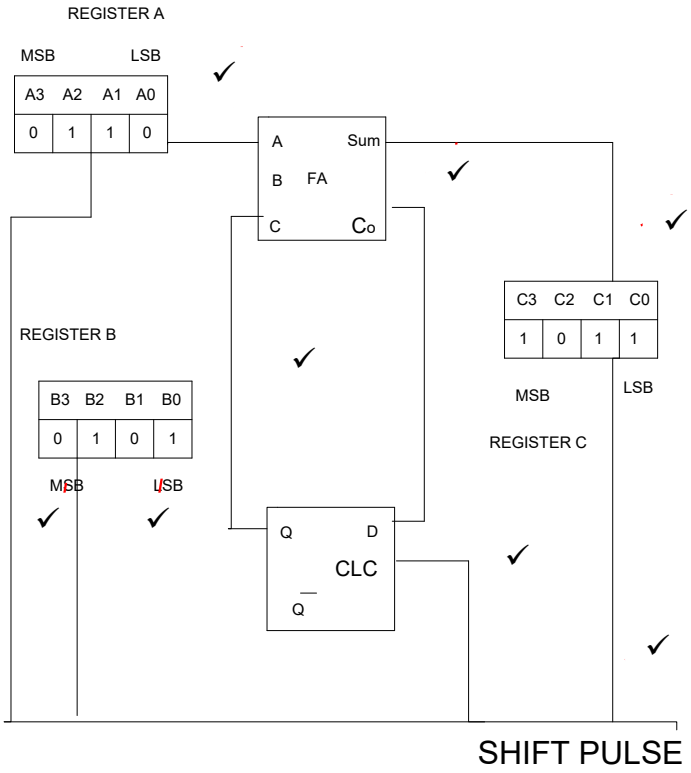

(8)

4.2

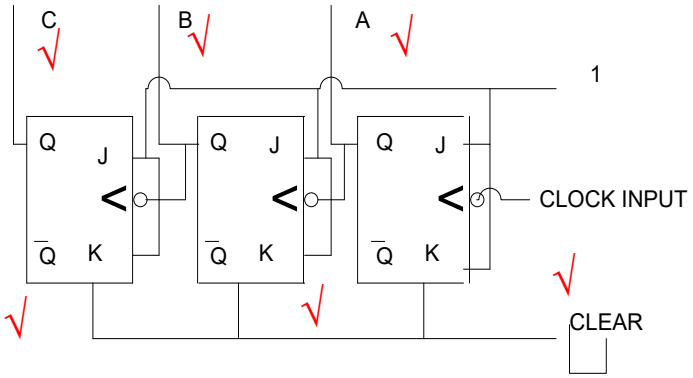

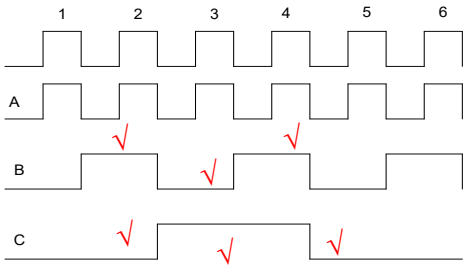

Clock	C	B	A
0	0	0	0✓
1	0	0	1✓
2	0	1	0✓
3	0	1	1✓
4	1	0	0✓
5	1	0	1✓
6	1	1	0✓
7	1	1	1✓

(10)
[18]

QUESTION 5

5.1

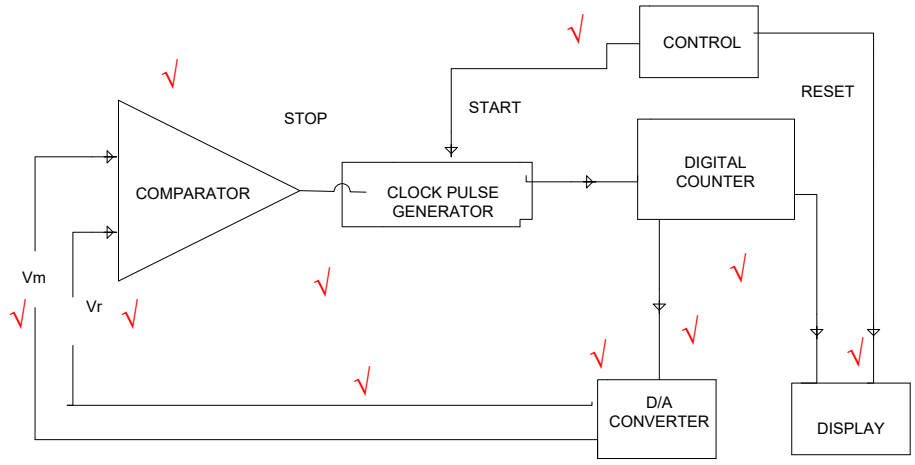

(10)

5.2

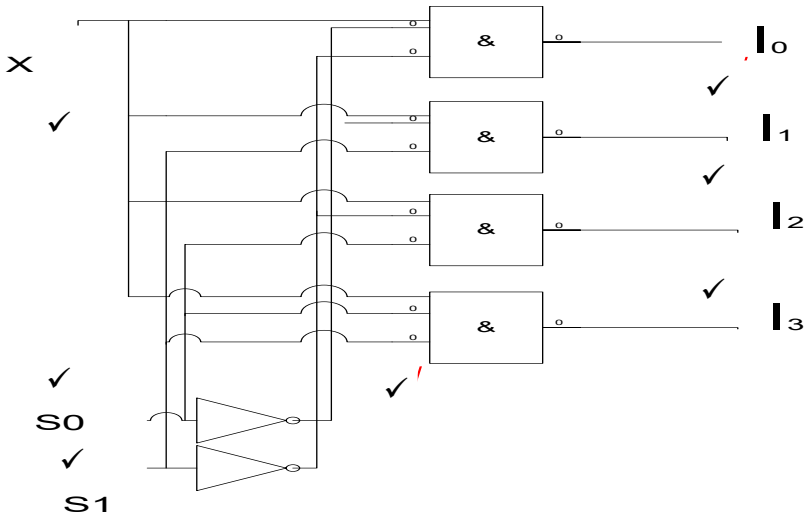

(7)
[17]

TOTAL: 100

Copyright reserved