higher education & training

Department:
Higher Education and Training
REPUBLIC OF SOUTH AFRICA

MARKING GUIDELINE

NATIONAL CERTIFICATE

APRIL EXAMINATION

DIGITAL ELECTRONICS N4

8 APRIL 2016

This marking guideline consists of 7 pages.

Copyright reserved

QUESTION 1

1.1
- Binary
- Radix

(2)

1.2 0,1,2,3,4,5,6,7,8,9,A,B,C,D,E,F (1)

1.3 $2^4 = 16$ (1)

1.4 Gray/X-3 BCD (1)

1.5

A	B	Q
0	0	1
0	1	1
1	0	1
1	1	0



$Q = \overline{A.B}$ (3)

1.6 1.6.1 1
1.6.2 1
1.6.3 $\overline{B}$
1.6.4 1

(4 × 1) (4)

1.7 Fan out refers to the number of inputs that can reliably be driven from a single output without overloading the output. (3)

1.8 $110111,11_{gray}$ (2)

1.9 $001000,11_{2.}$ (1)

1.10

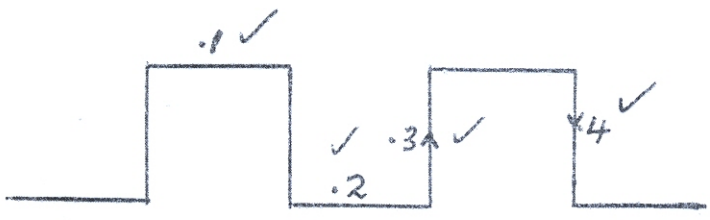

(4 × 1) (4)
[22]

QUESTION 2

2.1 2.1.1

$14,5_8 = 1100,101_2$
$14,375_{10} = 1110,011_2$

1100,101
0001,100
1110,001

No carry get 1's compl. Sign neg 0001,110
$= -1,75_{10}$ (6)

2.1.2

$14,5_{10} = 1110,1_2$ ✓
$5,4_8 = 101,100_2$ ✓

1110,1
X101,1
111101 ✓
1111010 ✓
11101000 ✓
1001111,11 ✓

$= 117,6_8$ ✓ (6)

2.1.3

$16,4_8 = 1110,1_2$ ✓
$6,5_{10} = 110,1_2$ ✓

$10,0010_2$ ✓
11001) 11101,000
1101
00011000 ✓
1101
10110 ✓

$= 2,1_8$ ✓ (6)

2.2 2.2.1

✓ ✓ ✓
$1100,0100\ 1011_{2421}$

2.2.2

✓ ✓ ✓
$0110,\ 0100\ 0101_{8421}$

2.2.3

✓ ✓ ✓
$1001\ 0111\ 1000_{X3BCD}$

(3 × 3) (9)
[27]

QUESTION 3

3.1 3.1.1

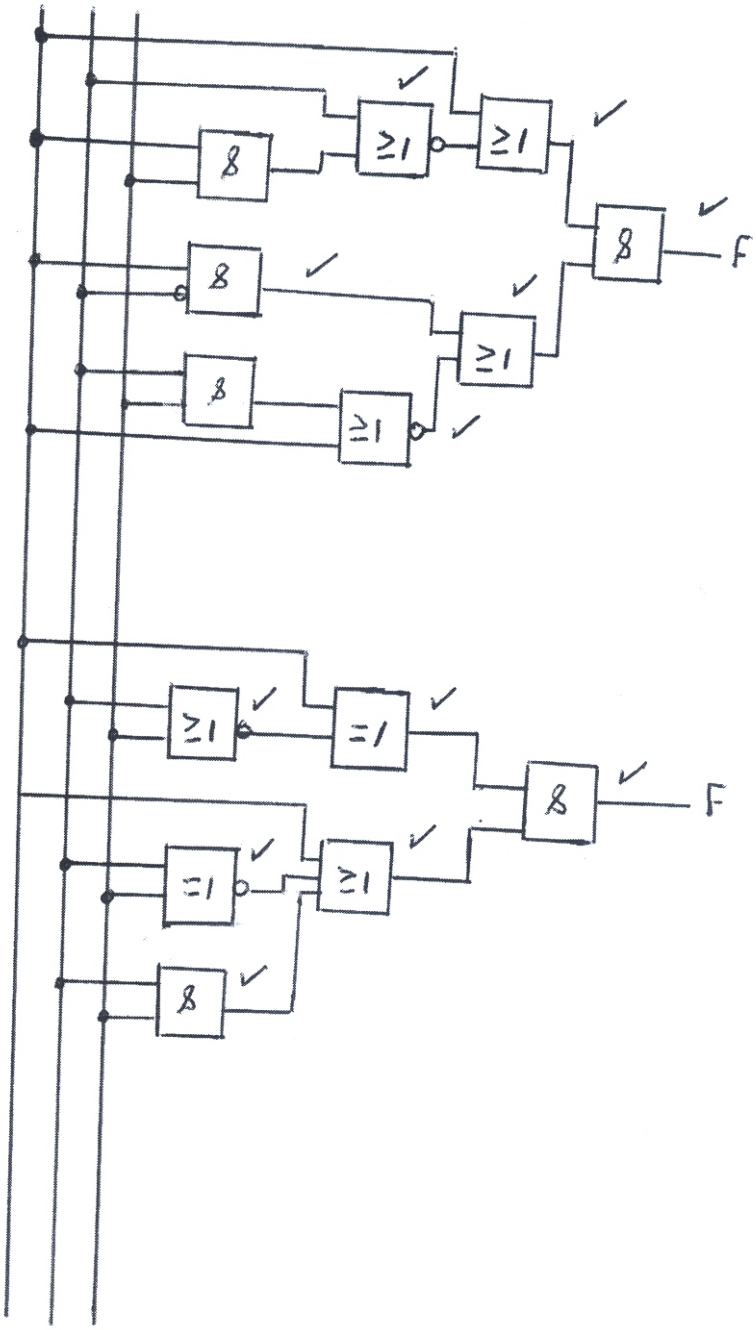

3.1.2

(2 × 6) (12)

3.2 3.2.1

A	B	C	Q
0	0	0	1
0	0	1	0
0	1	0	0
0	1	1	1
1	0	0	0
1	0	1	1
1	1	0	1
1	1	1	0

✓

(1)

3.2.2

$\overline{F = \overline{A}.\overline{B}.\overline{C} + \overline{A}.B.C + A.\overline{B}.C + A.B.\overline{C}}$ ✓

$F = \overline{A}.(\overline{B}.\overline{C} + B.C) + A(\overline{B}.C + B.\overline{C})$ ✓

$F = \overline{A}.(\overline{B \oplus C}) + A(B \oplus C)$ ✓

let... $B \oplus C = X$ ✓

$F = \overline{A}.\overline{X} + A.X$ ✓

$F = \overline{A \oplus X}$ ✓

replace.../ ...vervang

$F = \overline{A \oplus B \oplus C}$ ✓

(7)

3.2.3

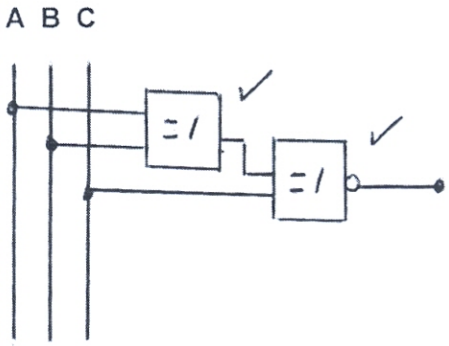

✓ ✓

(2)
[22]

QUESTION 4

4.1

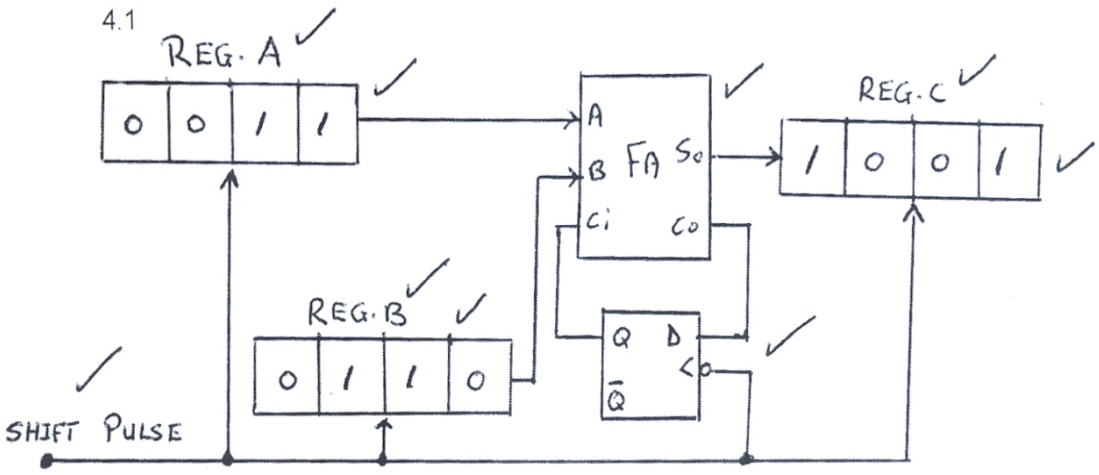

(9)

4.2

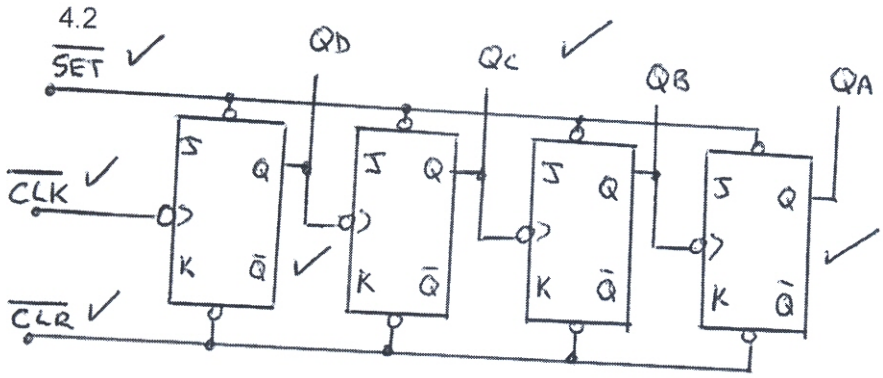

(6)
[15]

QUESTION 5

J	K	Q	Q
0	0	NO	CHANGE
0	1	0	1
1	0	1	0
1	1	TO	GGLE

The master-slave JK flip-flop

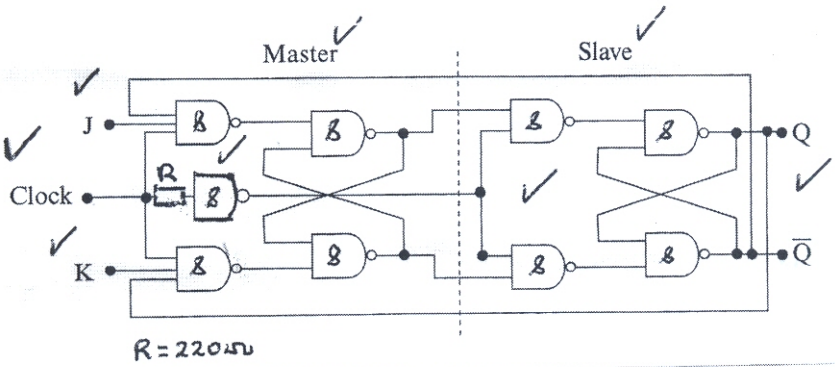



- Master closed Slave closed
- Master open Slave closed
- Master closed Slave closed
- Master closed Slave open **[14]**

TOTAL: 100

Copyright reserved