201311T087

higher education & training

Department:
Higher Education and Training
REPUBLIC OF SOUTH AFRICA

T390(E)(M24)T
APRIL EXAMINATION

NATIONAL CERTIFICATE

DIGITAL ELECTRONICS N4

(8080354)

24 March 2014 (Y-Paper)
13:00–16:00

Calculators may NOT be used.

This question paper consists of 5 pages.

ENGINEERING

Copyright reserved

DEPARTMENT OF HIGHER EDUCATION AND TRAINING
REPUBLIC OF SOUTH AFRICA

NATIONAL CERTIFICATE
DIGITAL ELECTRONICS N4
TIME: 3 HOURS
MARKS: 100

INSTRUCTIONS AND INFORMATION

1. Answer ALL the questions.
2. Read ALL the questions carefully.
3. Number the answers according to the numbering system used in this question paper.
4. Keep subsections of questions together.
5. ALL sketches and diagrams must be neat and labelled.
6. Write neatly and legibly.

ENGINEERING

Copyright reserved

QUESTION 1

1.1 Write down the symbols of the hexadecimal system. (1)

1.2 Write down the base of the octal system. (1)

1.3 How many input combinations can be used on a THREE-input AND gate? (1)

1.4 Name any weighted self-inverting code. (1)

1.5 Give the symbol, truth table and Boolean expression of a THREE-input OR gate. (3)

1.6 Write down the simplest form of the Boolean expressions below:

1.6.1 $A + \overline{ABC} + ABC$

1.6.2 $AB + ABC + 1 + BC$

1.6.3 $0 + A + \overline{A}BC + 0$

1.6.4 $C + \overline{A}BC + \overline{\overline{A}BC}$

(4 x 1) (4)

1.7 Which ONE of the synchronous or asynchronous binary counters uses a simultaneous clock pulse on all flip-flops? (1)

1.8 Convert 1011011_2 binary to the GRAY code. (1)

1.9 How many select lines are needed for a 1 : 4 line demultiplexer? (1)

1.10 State TWO differences between a ring counter and a Johnson counter. (2)

1.11 Which logic gate would you use to detect whether two logic inputs are the same? (1)

1.12 Which master/slave flip-flop has an undetermined output state? (1)

1.13 Make a sketch of a NAND gate connected to function as an inverter. (1)

1.14 Draw the symbol of a D-type master/slave flip-flop. (1)

1.15 Show the external connections needed on an RS master/slave flip-flop to make it toggle. Draw the symbol and the connections. (3)

[23]

ENGINEERING

Copyright reserved

QUESTION 2

2.1 Do the following calculations in the binary number system. Show all conversions and calculations clearly:

2.1.1 $12,75_{10} - 6,5_8$

Use the ONE's complement method and convert the final answer to the decimal system. (6)

2.1.2 $7,3_8 \times 2,6_8$

Convert the final answer to the octal system. (6)

2.1.3 $14,2_8 \div 3,75_{10}$

Convert the final answer to the decimal system. (6)

2.2 Write $5,38_{10}$ in the following binary codes:

2.2.1 2421 BCD (3)

2.2.2 Excess-3 BCD (3)

[24]

QUESTION 3

3.1 Draw the circuit diagrams of the Boolean expressions below. Do not change or simplify the expressions:

3.1.1 $\overline{\overline{AB} + \overline{\overline{A} + B} + \overline{AB + C}}$ (5)

3.1.2 $\overline{(\overline{BC} + AB)}(\overline{B + C} + \overline{A + B})$ (5)

3.1.3 $\overline{\overline{(A \oplus B + C)}(A + \overline{B \oplus C})}$ (5)

3.2 Design a circuit which will provide a binary 1 at the output only when the majority of the three inputs A,B,C are at binary 1.

Show the truth table and Boolean algebra and draw the circuit using only the MINIMUM number of NAND gates. (10)

3.3 Design an EXCLUSIVE OR function circuit using only FOUR NAND gates. Show all steps and draw the circuit diagram. (8)

[33]

ENGINEERING

Copyright reserved

QUESTION 4

4.1 Make a neat labelled sketch of a four-bit Johnson counter.

Draw the timing diagram for TEN clock pulses. (10)

4.2 Draw the circuit diagram of a three-bit asynchronous binary DOWN counter.

Draw the clock-pulse and count waveforms for SEVEN counts starting at 111_2 (10)
[20]

TOTAL: 100

ENGINEERING

Copyright reserved

higher education & training

Department:
Higher Education and Training
REPUBLIC OF SOUTH AFRICA

MARKING GUIDELINE

NATIONAL CERTIFICATE

APRIL EXAMINATION

DIGITAL ELECTRONICS N4

24 MARCH 2014

This marking guideline consists of 7 pages.

Copyright reserved

URAAGI / QUESTION 1.

1.1 0, 1, 2, 3, 4, 5, 6, 7, 8, 9, A, B, C, D, E, F. (1)

1.2 8 (1)

1.3 $2^3 = 8$ (1)

1.4 2421 / AIKEN (1)

1.5 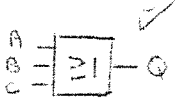

A	B	C	Q
0	0	0	0
0	0	1	1
0	1	0	1
0	1	1	1
1	0	0	1
1	0	1	1
1	1	0	1
1	1	1	1

$Q = A + B + C$ (3)

1.6 (4)

1.6.1 1

1.6.2 1

1.6.3 A + BC

1.6.4 1

1.7 Synchronous / SINKRONE (1)

1.8 1011011_2

1110110_{GRAY} (1)

1.9 2. (1)

1.10. (i) Q connects to J on ring / Q na J
$\bar{Q}$ connects to K on ring. / $\bar{Q}$ na K.
~~(ii)~~ Ring can circulate any pattern. / enige patroon.
(ii) ~~(iii)~~ Johnson has fixed pattern. / bepaalde patroon.
(iv) Johnson is a twisted ring counter. / Gedraaide.
(ANY TWO)

1.11 EXCLUSIVE NOR / EKSKLUSIEWE NOF.

1.12 RS

1.13 

1.14 

1.15 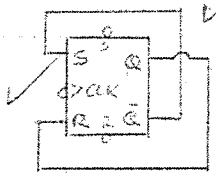

[23]

QUESTION 2 / VRAAG 2

2.1.1 $12{,}75_{10} = 1100{,}110 \longrightarrow 1100{,}110$
$6{,}5_8 = 0110{,}101 \xrightarrow{1'sc} 1001{,}010$
Carry = 1 add to LSD. $\quad 0110{,}000$
Sign neg. $\quad 1$
$- \; 0110{,}001$
$= - \; 6{,}125_{10}$ (6)

2.1.2. $7,3_8 = 111,011_2$
$2,6_8 = 010,110$

$$\begin{array}{r} 111,011 \\ \times\ 1011 \\ \hline 111011 \\ 111011 \\ 111011 \\ \hline 10100,01001_2 \end{array} = 24,22_8$$

(6)

2.1.3 $14,2_8 = 1100,010_2$
$3,75_{10} = 11,11_2$

$$\begin{array}{r} 011,0100 \\ 1111\ \overline{)\ 110001,0000} \\ -1111 \\ \hline 10011 \\ -01111 \\ \hline \cancel{00}10000 \\ -1111 \\ \hline 000100 \end{array}$$

$= 3,25_{10}$

(6)

2.2 $5,38_{10}$
(i) $1011,0011\ 1110_{2u21}$ (3)
(ii) $1000,0110\ 1011_{x3}$ (3)

[24]

VRAAG 3 / QUESTION 3

3.1.1

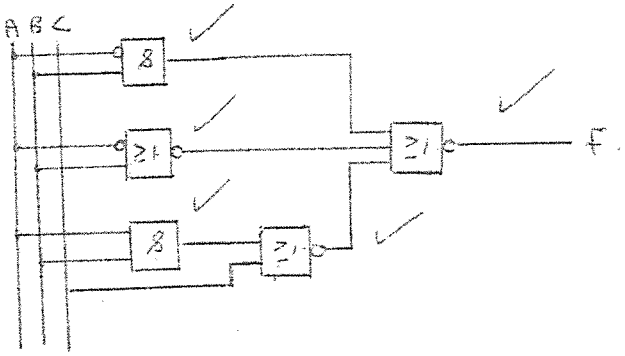

(5)

3.1.2

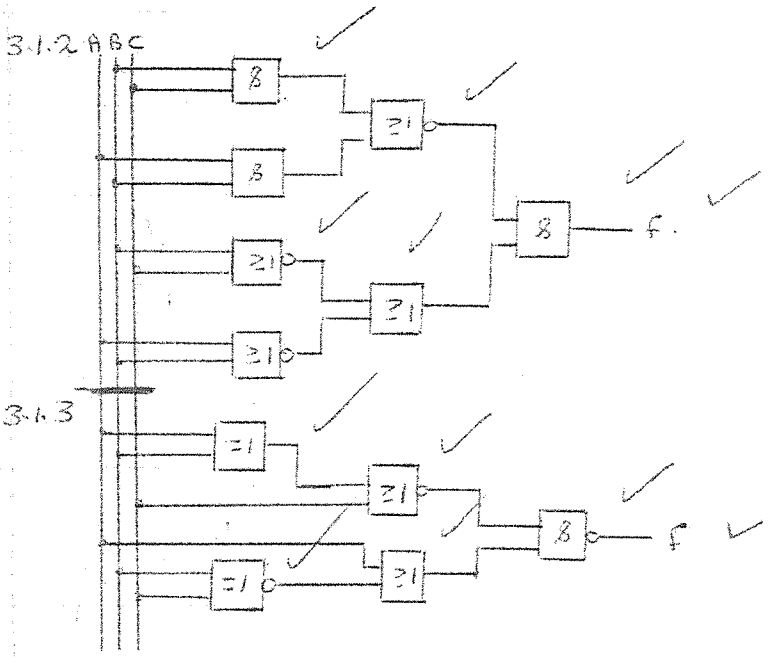

(5)

3.1.3

(5)

3.2

A	B	C	Q
0	0	0	0
0	0	1	0
0	1	0	0
0	1	1	1
1	0	0	0
1	0	1	1
1	1	0	1
1	1	1	1

$Q = \bar{A}BC + A\bar{B}C + AB\bar{C} + ABC$

$= \bar{A}BC + A\bar{B}C + AB(\bar{C} + C)$

$= \bar{A}BC + A(\bar{B}C + B)$

$= \bar{A}BC + AC + AB$

$= C(\bar{A}B + A) + AB$

$= BC + AC + AB$

7O NANDS

$\frac{BC + AC + AB}{} = \frac{\overline{BC} \cdot \overline{AC} \cdot \overline{AB}}{}$

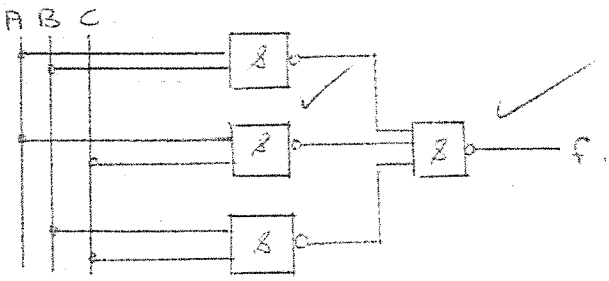

(10)

3.3 XOR

A	B	Q
0	0	0
0	1	1
1	0	1
1	1	0

$Q = \bar{A}B + A\bar{B} + 0 + 0$

$= \bar{A}B + A\bar{B} + A\bar{A} + B\bar{B}$

$= A(\bar{A} + \bar{B}) + B(\bar{A} + \bar{B})$

$= A(\overline{AB}) + B(\overline{AB})$

To NANDS:

$A(\overline{AB}) + B(\overline{AB})$

$= \overline{A(\overline{AB}) \cdot B(\overline{AB})}$

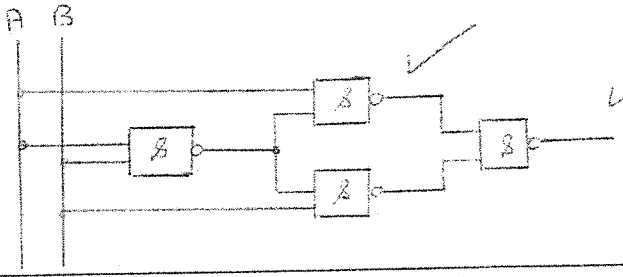

(8)

[33]

QUESTION 4 / VRAAG 4

4.1

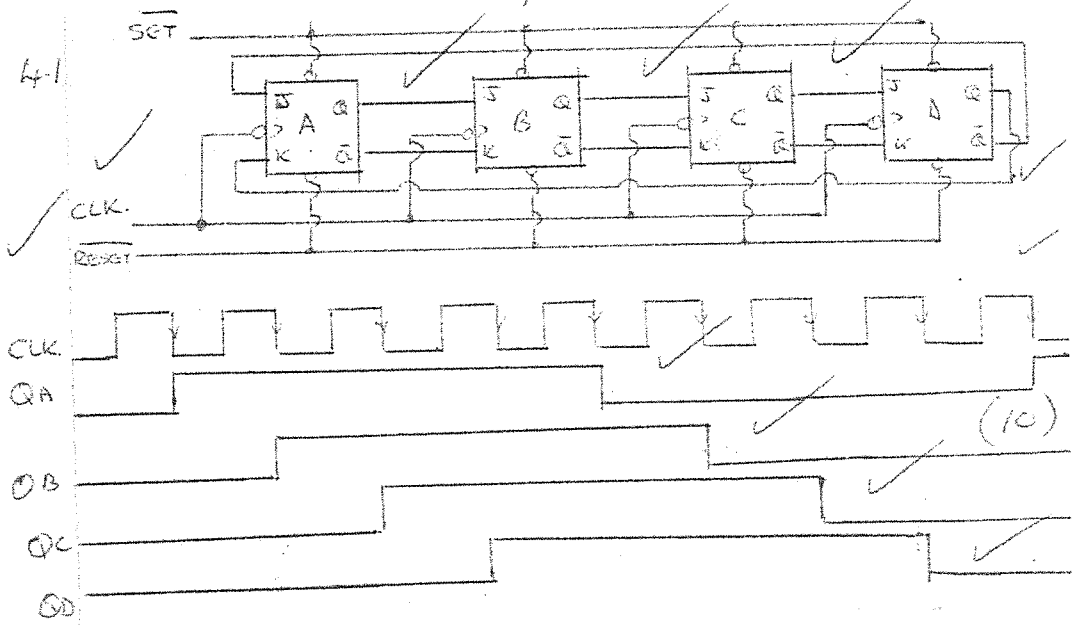

(10)

4.2

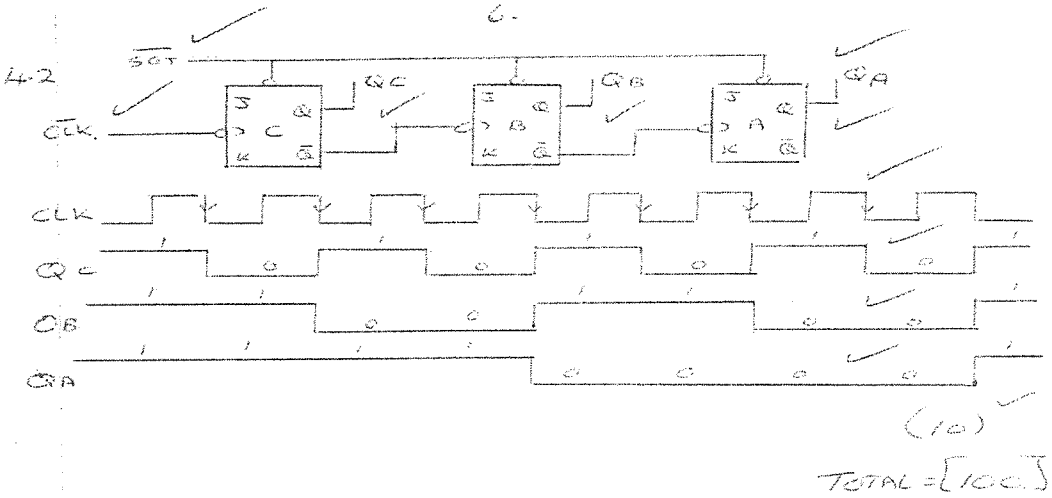

(10)

TOTAL = [10]

Copyright reserved