higher education & training

Department:
Higher Education and Training
REPUBLIC OF SOUTH AFRICA

NASIENRIGLYN

NASIONALE SERTIFIKAAT: MULTIDISSIPLINÊRE TEKENKANTOORPRAKTYK

REKENAARGESTEUNDE TEKENWERK

21 April 2021

Hierdie nasienriglyn bestaan uit 7 bladsye.

Kopiereg voorbehou

VRAAG 1: REKENAARORIËNTERING

1.1 1.1.1 Waar
1.1.2 Onwaar
1.1.3 Onwaar
1.1.4 Onwaar

(4 × 1) (4)

1.2 1.2.1 Optiese vesel is glasvesels wat inligting as ligseine oordra. (1)

1.2.2 'n Werkstasie is 'n individuele rekenaar wat aan 'n netwerk gekoppel is. (1)

1.2.3 'n Modem is 'n verbindingstoestel wat data oordra om aan die internet te koppel. (1)

1.2.4 E-pos is 'n metode waarop boodskappe of inligting vanaf 'n rekenaar oor 'n netwerk na ander elektroniese toestelle, of omgekeerd, gestuur word. (1)

1.2.5 'n Netwerk is 'n rekenaarstelsel wat aan 'n sentrale punt gekoppel is waarvandaan data herwin en verwerk word. (2)

[10]

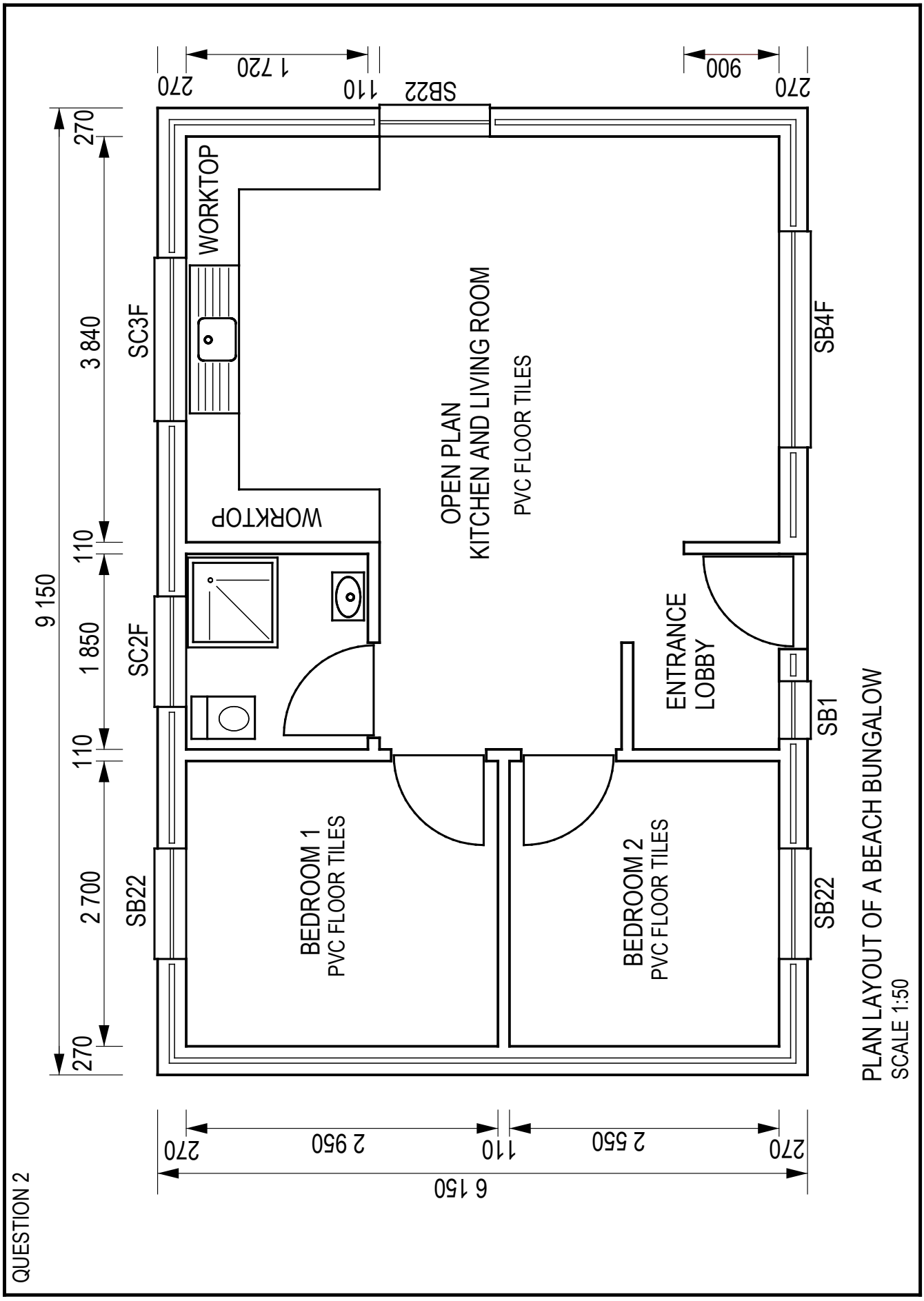
QUESTION 2
PLAN LAYOUT OF A BEACH BUNGALOW
SCALE 1:50
OPEN PLAN
KITCHEN AND LIVING ROOM
PVC FLOOR TILES
WORKTOP
WORKTOP
BEDROOM 1
PVC FLOOR TILES
BEDROOM 2
PVC FLOOR TILES
ENTRANCE
LOBBY
SC3F
SC2F
SB22
SB22
SB4F
SB1
SB22
270
1 720
110
900
270
270
3 840
110
1 850
110
2 700
270
9 150
270
2 950
110
2 550
270
6 150

QUESTION 3

QUESTION 3.1

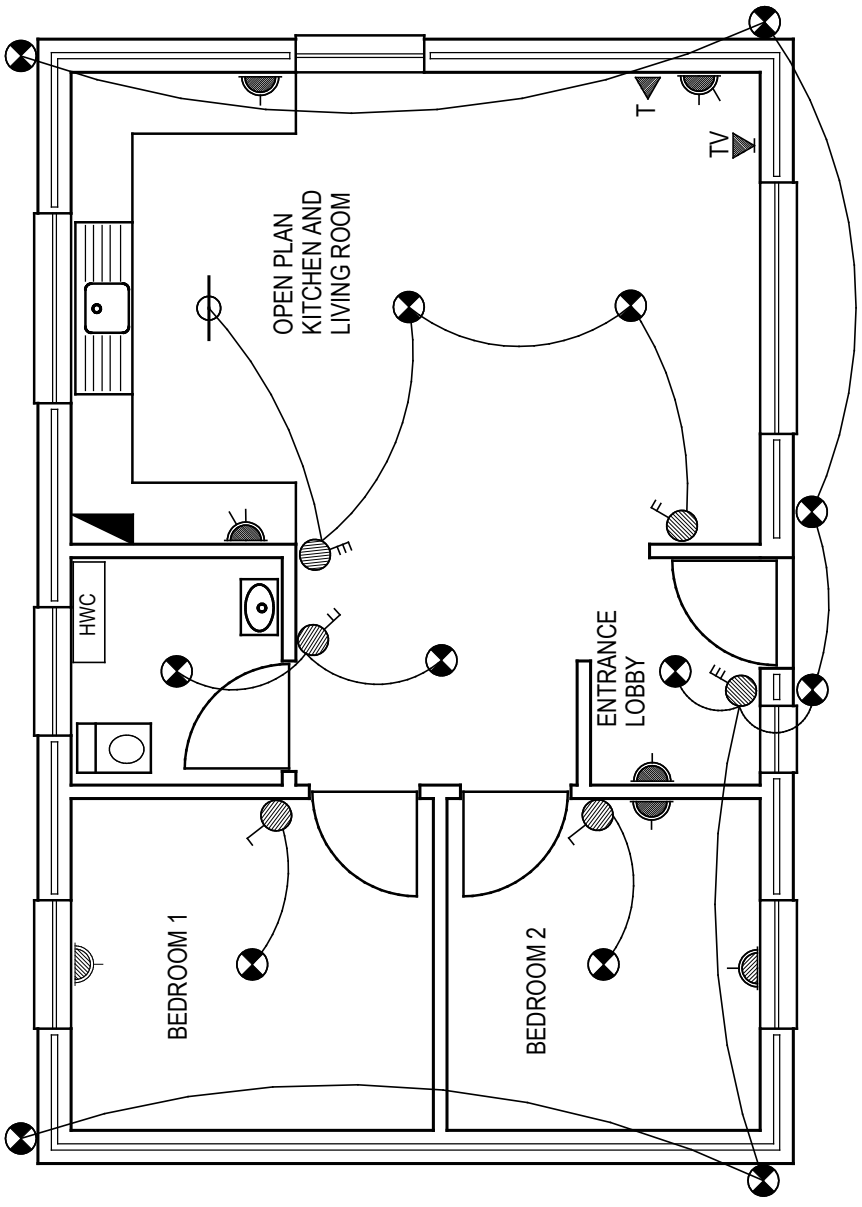

ELECTRICAL LAYOUT FOR BEACH BUNGALOW

QUESTION 3.2

ELECTRICAL LEGEND	
15 AMP POWER POINT	
DOUBLE 15 AMP POWER POINT	
LIGHT FITTING	
SINGLE FLUORESCENT LIGHT FITTING	
TV CONNECTION	TV
LIGHT SWITCH	
2 WAY LIGHT SWITCH	
3 WAY LIGHT SWITCH	
HOTWATER CYLINDER	HWC
DISTRIBUTION BOARD	

QUESTION 4

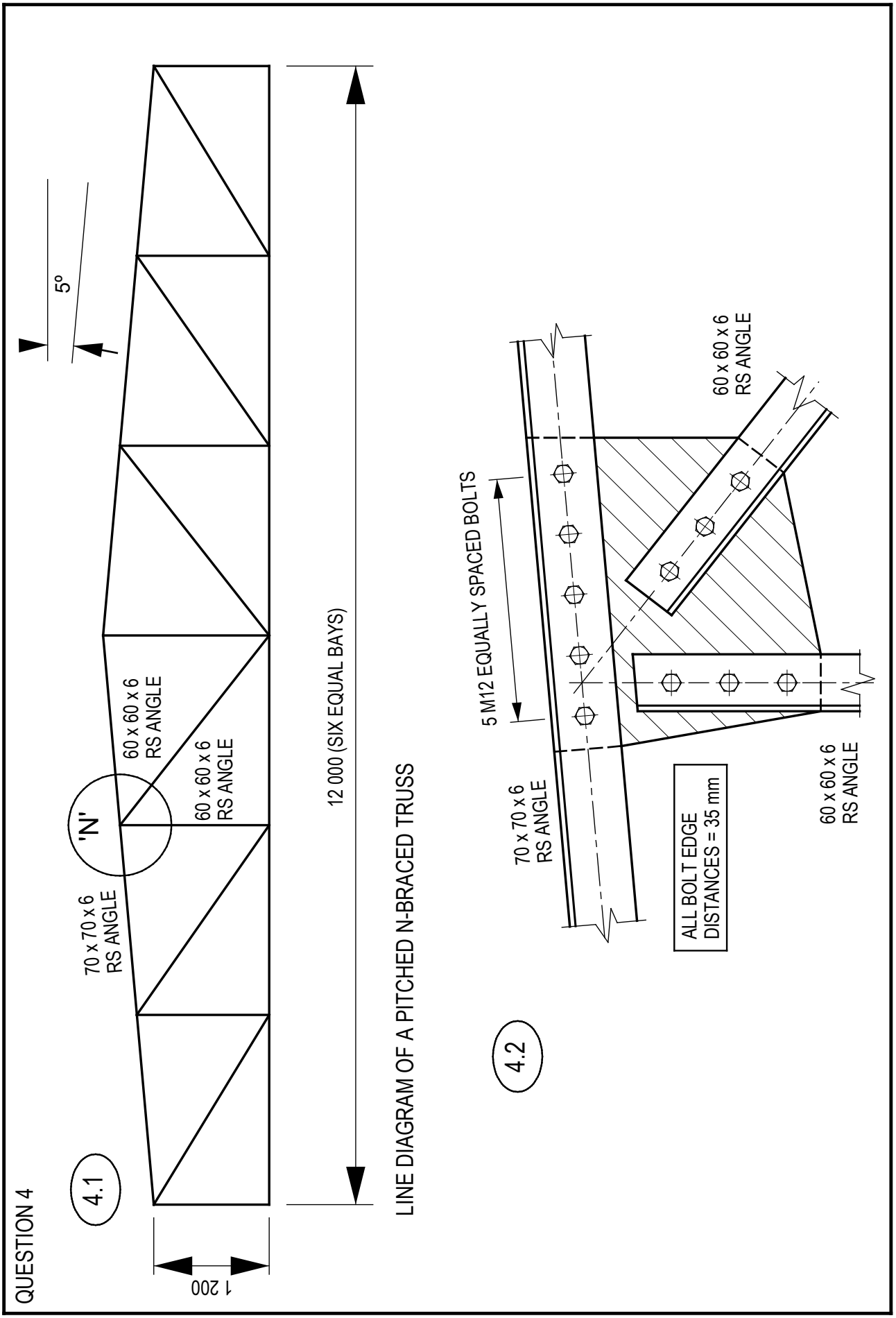
4.1
5°
'N'
60 x 60 x 6 RS ANGLE
60 x 60 x 6 RS ANGLE
70 x 70 x 6 RS ANGLE
12 000 (SIX EQUAL BAYS)
1 200
LINE DIAGRAM OF A PITCHED N-BRACED TRUSS
4.2
5 M12 EQUALLY SPACED BOLTS
60 x 60 x 6 RS ANGLE
70 x 70 x 6 RS ANGLE
60 x 60 x 6 RS ANGLE
ALL BOLT EDGE DISTANCES = 35 mm

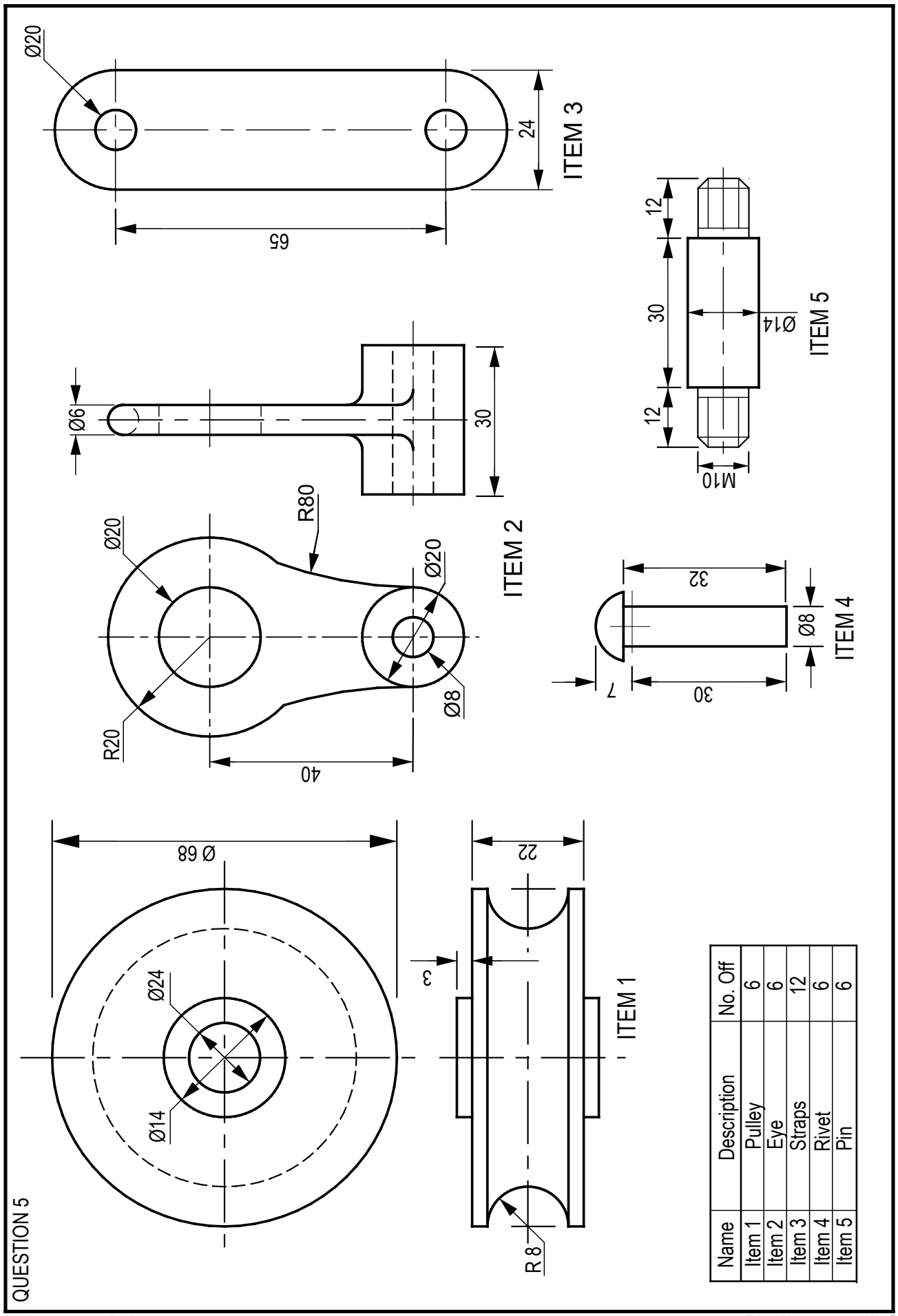

Name	Description	No. Off
Item 1	Pulley	6
Item 2	Eye	6
Item 3	Straps	12
Item 4	Rivet	6
Item 5	Pin	6

QUESTION 1 (Computer Orientation)
1 mark for each correct answer Total = 10 marks

QUESTION 2 (Building)		
MARK ALLOCATION		
CORRECTNESS:		12
Ext. Dimensions	2	
Cavity wall	2	
Int. Walls	2	
Windows	2	
Doors	2	
Bath room	2	
Accuracy		3
Dimensions		3
Labels		2
Total		20

QUESTION 3.1 (Electrical)	
MARK ALLOCATION	
CORRECTNESS:	
Plan view copied.	1
All switches and lights	4
All power points	4
Telephone and TV	2
DB & HWC	2
Wiring arcs lines	2
Total	15

QUESTION 3.1	
MARK ALLOCATION	
Legend drawn corr.	5
Legend incomplete	
(2 marks)	
Total	5

Total = 20 marks

QUESTION 5 (Mechanical)		
MARK ALLOCATION		
Correctness:		19
Items Drawn corr	16	
Material list	3	
Accuracy / Scale		3
Centre lines		3
Labels		2
Dimensions		3
Total		30

Items 1 & 2 = 5 marks each
Items 3,4 & 5 = 3 marks each
10 + 6 = 16

QUESTION 4 (Structural)	
MARK ALLOCATION (Q4.1)	
Correctness:	
Corr pitch	1
Shape corr	2
Total	3
Accuracy	2
Centre line	2
Hatching	1
Lables	2
Total	7

MARK ALLOCATION (Q4.2)	
Correctness:	
Set-out angles corr	2
Angles in corr position	2
All bolts corr	4
Gusset plate	2
Total	10

SUMMARY
3 + 10 + 7 |
Total = 20 Marks

TOTAL = 100 marks

Kopiereg voorbehou