higher education & training

Department:
Higher Education and Training
REPUBLIC OF SOUTH AFRICA

NASIENRIGLYN

NASIONALE SERTIFIKAAT

KOMMUNIKASIE-ELEKTRONIKA N5

26 Julie 2021

Hierdie nasienriglyn bestaan uit 7 bladsye.

Kopiereg voorbehou

VRAAG 1

1.1 1.1.1

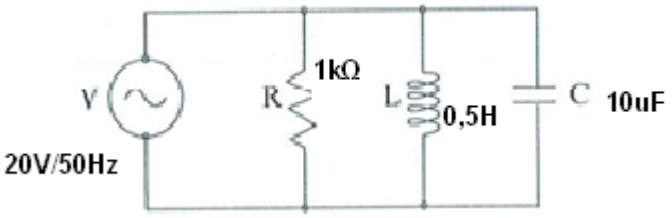

✓✓

(2)

1.1.2 (a) $IR = \frac{20}{1\,000}$

$= 0,1$ A✓ (1)

$IL = \frac{V}{XL}$

$= \frac{100}{2\pi \times 50 \times 0,5}$✓

$= 0,673$ A✓ (2)

$IC = \frac{V}{Xc}$

$= \frac{100 \times 2\pi \times 50 \times 10}{10^6}$✓

$= 0,314$ A✓ (2)

$Ix = IL - IC$

$= 0,673 - 0,314$✓

$= 0,323$ A✓ (2)

$IT = \sqrt{IR^2 + Ix^2}$

$= \sqrt{0,1^2 + 0,323^2}$

$= 0,338$ A ✓ (1)

(b) $\Theta = \tan^{-1}\frac{Ix}{IR}$

$= \tan^{-1}\frac{0,323}{0,1}$✓

$= 72°46$✓ (2)

1.2

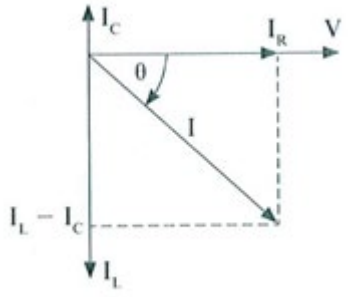

(4)

1.3 1.3.1

$$Z_{RL} = R + jX_L$$
$$Z_{RL} = 3 + j4$$
$$Z_{RL} = 5\Omega\angle 25.32°$$

$$Z_C = 0 - jX_C$$
$$Z_C = 0 - j3$$
$$Z_C = 3\Omega\angle -90° \checkmark\checkmark$$

$$I_{LR} = \left(\frac{Z_C}{Z_{LR} + Z_C}\right) I_S$$
$$I_{LR} = \left(\frac{3\Omega\angle -90°}{3 + j4 - j3}\right) 50A\angle 30°$$
$$I_{LR} = 75A\angle -41{,}565° \quad \checkmark\checkmark\checkmark$$ (5)

1.3.2

$$I_C = \left(\frac{Z_{LR}}{Z_{LR} + Z_C}\right) I_S \checkmark$$
$$I_C = \left(\frac{5\Omega\angle 25.32°}{3 + j4 - j3}\right) 50A\angle 30° \checkmark$$
$$I_C = \left(\frac{100V\angle 55{,}32°}{2\Omega\angle 18{,}433°}\right) \checkmark$$
$$I_C = 50A\angle 36{,}89° \checkmark$$

(4)
[25]

VRAAG 2

Kyk in vanaf R1

$$R1 = RA + \frac{RB \times R2}{RB + R2}$$ (1)

Vermenigvuldig met die gemene noemer RB + R2

R1 (RB + R2) = RA (RB + R2) + RB. R2

R1RB + R1R2 = RARB + RAR2 + RB. R2 ……Eq. 1 (2)

Kyk in vanaf R2

$$R2 = \frac{RB(R1 + RA)}{RB + (R1 + RA)}$$

$$R2 = \frac{RBR1 + RARB}{RB + R1 + RA}$$ (2)

Vermenigvuldig met die gemene noemer RB + R1 + RA

$$R2\ (RB + R1 + RA) = R1RB + RARB$$

$$R2\ RB + R1\ R2 + R2RA = R1RB + RARB \text{ .....Verg. 2} \qquad (2)$$

Tel Verg. 1 en Verg. 2 bymekaar

$$R1RB + R1R2 = RARB + RAR2 + RB.\ R2$$

$$R2\ RB + R1\ R2 + R2RA = R1RB + RARB$$

$$2\ R1\ R2 + R1RB + R2\ RB + R2RA = 2\ RARB + RAR2 + R1RB + RB.\ R2$$

$$\therefore 2\ R1\ R2 = 2\ RARB$$

$$R1\ R2 = \frac{2RARB}{2}$$

$$R1\ R2 = RARB$$

$$\text{Dus } RA = \frac{R1R2}{RB} \qquad (5)$$

Vervang $\frac{R1R2}{RB}$ in RA in Verg. 1

$R1RB + R1R2 = RARB + RAR2 + RB.\ R2$ ..... Verg. 1.

$$\therefore R1R2 + R1RB = \left(\frac{R1R2}{\cancel{RB}}\right)\cancel{Rs} + \left(\frac{R1R2}{RB}\right)R2 + RB.\ R2$$

$$R1R2 + R1RB = R1R2 + \frac{R1R2^2}{RB} + RB.\ R2 \qquad (4)$$

Vermenigvuldig met noemer RB

$$RB\ (R1R2 + R1RB) = RB\ (R1R2) + \frac{RB}{1}\left(\frac{R1R2^2}{RB}\right) + (RB.\ R2)\ RB$$

$$\cancel{RB\ R1R2} + R1RB^2 = \cancel{RB\ R1R2} + R1R2^2 + R2\ RB^2$$

$$R1RB^2 = R1R2^2 + R2\ RB^2$$

$$R1RB^2 - R2\ RB^2 = R1R2^2 \qquad (3)$$

Neem die gemene faktor RB^2

$$RB^2\ (R1 - R2) = R1R2^2$$

$$\therefore RB^2 = \frac{R1R2^2}{R1-R2}$$

$$\text{Dan } RB = \sqrt{\frac{R1R2^2}{R1-R2}} \qquad (2)$$

Om RA te bepaal, deel: $RA = \frac{R1R2}{RB}$

$$\therefore RA = \frac{R1 - R2}{\sqrt{\frac{R1R2^2}{R1-R2}}}$$

$$= \frac{R1\ R2}{\sqrt{R1R2^2}} \div \frac{1}{\sqrt{R1-R2}}$$

$$= \frac{R1\ R2}{\sqrt{R1R2^2}} \times \frac{\sqrt{R1-R2}}{1}$$

$$= \frac{R1\ \cancel{R2}}{\cancel{R2}\sqrt{R1}} \times \frac{\sqrt{R1-R2}}{1}$$

$$= \frac{R1}{\sqrt{R1}} \times \frac{\sqrt{R1-R2}}{1}$$

$$= \frac{\sqrt{R1}\ .\sqrt{R1}}{\sqrt{R1}} \times \frac{\sqrt{R1-R2}}{1}$$

$$= \frac{(\sqrt{R1}\ .\cancel{\sqrt{R1}})}{\cancel{\sqrt{R1}}} \times \frac{\sqrt{R1-R2}}{1}$$

$$= \sqrt{R1} \times \sqrt{R1-R2}$$

$$RA = \sqrt{R1(R1-R2)}$$ (9)

[30]

VRAAG 3

3.1 3.1.1

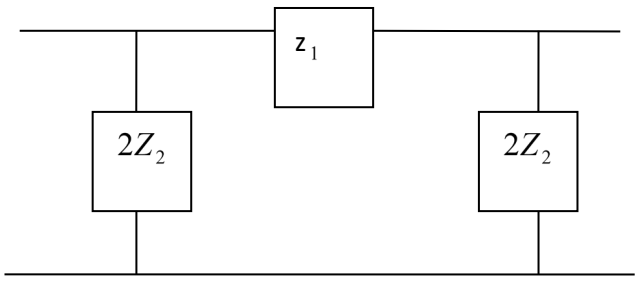

$$Z_1 = j\omega L; \qquad Z_2 = \frac{1}{j\omega C}$$

3.1.2

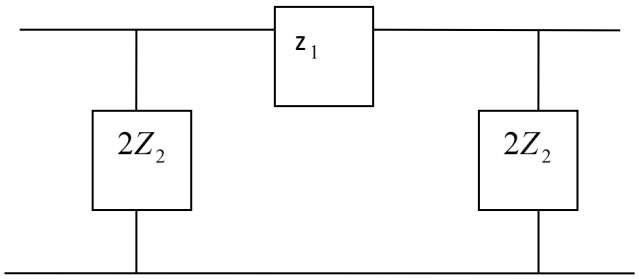

$$Z_1 = \frac{1}{j\omega C}; \qquad Z_2 = j\omega L$$

3.1.3

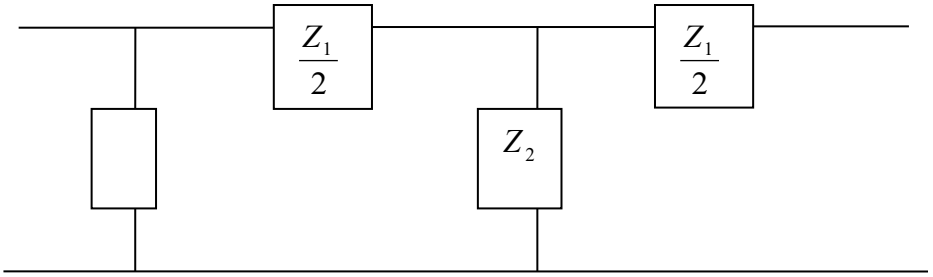

$$Z_1 = j\omega L; \qquad Z_2 = \frac{1}{j\omega C}$$

(3 × 4) (12)

3.2 $F_C = \frac{1}{\pi\sqrt{LC}}$✓

$= \frac{1}{\pi\sqrt{100 \times 10^{-3} \times 2 \times 10^{-6}\text{C}}}$✓✓

= 711,76 Hz✓ (4)
[16]

VRAAG 4

4.1 Outomatiese frekwensiebeheer vir 'n tipiese FM-sender (1)

A Reaktansiebuis
B Modulatorossilator
C Harmoniese generatorversterker 1
D Harmoniese generatorversterker 2
E Menger
F Menger FM-diskrimineerder
G GS-versterker (7 × 1) (7)

4.2

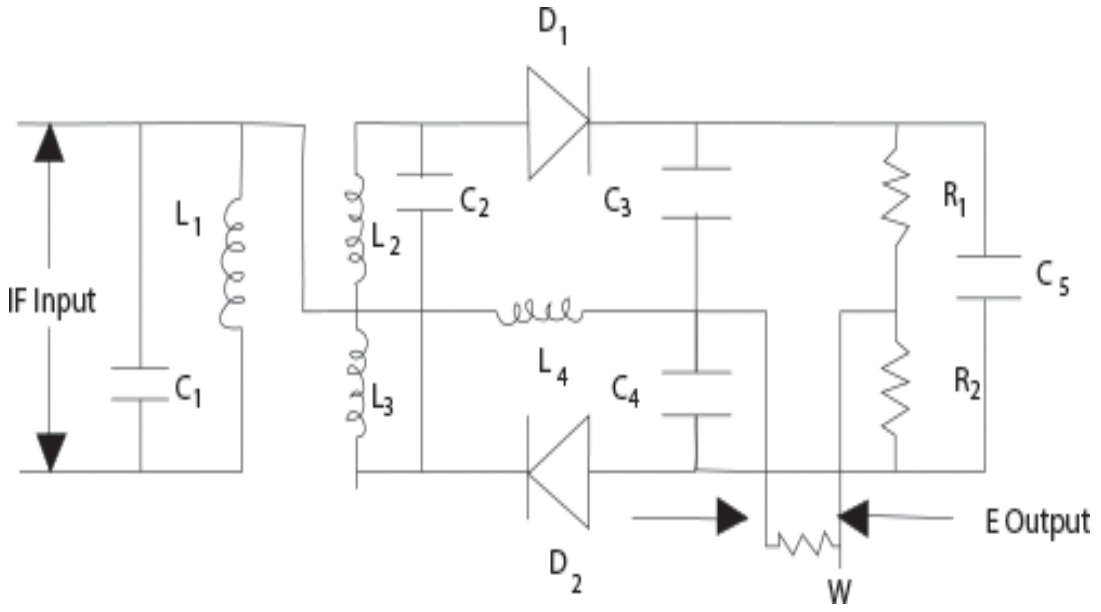

(12)
[20]

VRAAG 5

5.1 5.1.1 Die verhouding van die krag wat deur die antenna uitgestraal word tot die tweede mag van die stroom by die voerpunt

5.1.2 Die rigting in ruimte van die elektriese vektor van die elektromagnetiese golf wat uit die antenne gestraal word, en is parallel aan die antenne self

(2 × 2) (4)

5.2 Die halfgolfdipool is baie onstabiel vir HF, BHF en UHF.
Teen laer frekwensies is die fisiese afmeting van die lugdraad van die halfgolfdipool te groot. (2)

5.3 Effektiewe stralingsvlak is die fisiese afmetings van die antenne wat die krag bepaal wat deur die antenne ontvang word en is direk eweredig aan die afvoerarea van die antenne. (3)
[9]

TOTAAL: 100

Kopiereg voorbehou