higher education & training

Department:
Higher Education and Training
REPUBLIC OF SOUTH AFRICA

NASIENRIGLYN

NASIONALE SERTIFIKAAT

KOMMUNIKASIE-ELEKTRONIKA N5

24 JULIE 2018

Hierdie nasienriglyn bestaan uit 8 bladsye.

Kopiereg voorbehou

VRAAG 1: WS-NETWERKE

1.1 $Z^2 = R^2 + X^2$

$Z = \sqrt{R^2 + (X_L - X_C)^2}$

$Z = \sqrt{6^2 + (7 - 15)^2}$

$= \sqrt{36 + 64}$

$= \sqrt{100}$

$= 10\ \Omega$✓✓

$I_T = \frac{V}{Z}$

$= \frac{100}{10}$

$= 10\ A$✓ (3)

1.2 $V_R = I_T \times R$
$= 10 \times 6$
$= 60\ V$✓✓ (2)

1.3. $V_L = I_T \times X_L$
$= 10 \times 9$
$= 90\ V$✓✓ (2)

1.4 $\text{Vermoë} \left(\frac{V_R^2}{R}\right) = \frac{V_R^2}{R}$
$= \frac{60^2}{6}$
$= 600\ W$✓✓ (2)

1.5 $\text{Vermoë (Pt)} = (I^2 \times R)$
$= 10^2 \times 6$
$= 600\ W$✓✓ (2)

1.6 Vermoë $(E \times I\text{Cos}\theta) = E \times I \text{ Cos } \theta$

$$\text{en Cos}\theta = \frac{R}{Z}$$

$$= \frac{6}{10}$$

$$= \mathbf{0,6}\checkmark$$

$$\Theta = \text{Cos}^{-1} \times \frac{R}{Z}$$

$$= \text{Cos}^{-1}(0,6)$$

$$= \mathbf{53,13°}\checkmark\checkmark$$

$$\text{daarom } E \times I\text{Cos}\theta = 30 \times 10 \times 0,6$$

$$= \mathbf{180\ W}\checkmark$$ (4)

1.7 Vermoë $(I^2R) = I^2 \times R$

$$= 10^2 \times 6$$

$$= \mathbf{600\ W}\checkmark\checkmark$$ (2)

1.8 $E.I_T = E \times I_T$

$$= 30 \times 10$$

$$= \mathbf{300\ W}\checkmark\checkmark$$ (2)

1.9 $I^2Z = I_T{}^2 \times Z$

$$= 10^2 \times 10$$

$$= \mathbf{1\ 000\ W}\checkmark\checkmark$$ (2)

1.10 Vermoë $ZP(\frac{E^2}{Z}) = \frac{E^2}{Z}$

$$= \frac{30^2}{10}$$

$$= \mathbf{90\ W}\checkmark\checkmark\checkmark$$ (3)

[24]

VRAAG 2: VIERAANSLUITERNETTE

2.1 Invoegingsverlies is die totale verlies van die wanaanpassingverliese tesame met die verswakkkerverliese as 'n net ingevoeg word. (2)

2.2 $Z_{ab} = \frac{Z_a(Z_b+Z_c)}{Z_a+Z_b+Z_c} = Z_1 + Z_3$ ..... eq.(1)✓

$Z_{ac} = \frac{Z_b(Z_a+Z_c)}{Z_a+Z_b+Z_c} = Z_1 + Z_2$ ..... eq.(2)✓

$Z_{cd} = \frac{Z_c(Z_a+Z_c)}{Z_a+Z_b+Z_c} = Z_2 + Z_3$ .....eq.(3)✓

Om Z1 te bepaal, tel eq.1 en 2 by en trek eq.3 af

d.i. Z1 = eq.(1) + eq.(2) – eq.(3)

$= (Z_1 + Z_3) + (Z_1 + Z_2) - (Z_2 + Z_3) = \frac{Z_a(Z_b+Z_c)}{Z_a+Z_b+Z_c} + \frac{Z_b(Z_a+Z_c)}{Z_a+Z_b+Z_c} - \frac{Z_c(Z_a+Z_c)}{Z_a+Z_b+Z_c}$

$Z_1 + Z_3 + Z_1 + Z_2 - Z_2 - Z_3 = \frac{Z_a(Z_b+Z_c)+Z_b(Z_a+Z_c) - Z_c(Z_a+Z_b)}{Z_a+Z_b+Z_c}$

$$2Z_1 = \frac{Z_aZ_b + Z_aZ_c + Z_bZ_a + Z_bZ_c - Z_aZ_c - Z_cZ_b}{Z_a + Z_b + Z_c}$$

$$2Z_1 = \frac{2Z_aZ_b}{Z_a + Z_b + Z_c}$$

$$\mathbf{Z_1} = \frac{\mathbf{Z_aZ_b}}{\mathbf{Z_a+Z_b+Z_c}}$$✓

Om Z2 te bepaal, tel eq.1 en 3 by en trek eq.1 af

d.i. Z2 = eq.(2) + eq.(3) – eq.(1)✓✓

$(Z_1 + Z_2) + (Z_2 + Z_3) - (Z_1 + Z_3) = \frac{Z_b(Z_a+Z_c)}{Z_a+Z_b+Z_c} + \frac{Z_c(Z_a+Z_c)}{Z_a+Z_b+Z_c} - \frac{Z_a(Z_b+Z_c)}{Z_a+Z_b+Z_c}$

$z_1 + z_2 + z_2 + z_3 - z_1 - z_3 = \frac{Z_b(Z_a+Z_c)+Z_c(Z_a+Z_c) - Z_a(Z_b+Z_c)}{Z_a+Z_b+Z_c}$

$$2Z_2 = \frac{Z_aZ_b + Z_bZ_c + Z_aZ_c + Z_bZ_c - Z_aZ_b - Z_aZ_c}{Z_a + Z_b + Z_c}$$

$$2Z_2 = \frac{2Z_bZ_c}{Z_a + Z_b + Z_c}$$

$$\mathbf{Z_2} = \frac{\mathbf{Z_bZ_c}}{\mathbf{Z_a+Z_b+Z_c}}$$✓

Om Z3 te bepaal, tel eq.1 en 3 by en trek eq.2 af

d.i. Z3 = eq.(1) + eq.(3) – eq.(2)

$$(Z_1 + Z_3) + (Z_2 + Z_3) - (Z_1 + Z_2) = \frac{Z_a(Z_b + Z_c)}{Z_a + Z_b + Z_c} + \frac{Z_c(Z_a + Z_b)}{Z_a + Z_b + Z_c} - \frac{Zb(Z_a + Z_c)}{Z_a + Z_b + Z_c}$$

$$z1 + z3 + z2 + z3 - z1 - z2 = \frac{Z_a(Z_b + Z_c) + Z_c(Z_a + Z_b) - Z_b(Z_a + Z_c)}{Z_a + Z_b + Z_c}$$ ✓✓✓

$$2Z_3 = \frac{Z_aZ_b + Z_aZ_c + Z_aZ_c + Z_bZ_c - Z_aZ_b - Z_bZ_c}{Z_a + Z_b + Z_c}$$

$$2Z_3 = \frac{2Z_aZ_c}{Z_a + Z_b + Z_c}$$

$$\mathbf{Z_3} = \frac{\mathbf{Z_aZ_c}}{\mathbf{Z_a + Z_b + Z_c}}$$ ✓✓

Aangesien $Z_1 = \frac{Z_aZ_b}{Z_a + Z_b + Z_c}$

d.i. $Z_1 = \frac{733 \times 2\,972}{733 + 2\,972 + 733}$

$= \mathbf{491\ \Omega}$ ✓✓

Aangesien $Z_2 = \frac{Z_bZ_c}{Z_a + Z_b + Z_c}$

d.i. $Z_2 = \frac{2\,972 \times 733}{733 + 2\,972 + 733}$

$= \mathbf{491\ \Omega}$ ✓✓

Aangesien $Z_3 = \frac{Z_aZ_c}{Z_a + Z_b + Z_c}$

d.i. $Z_3 = \frac{733 \times 733}{733 + 2\,972 + 733}$

$= \mathbf{121\ \Omega}$ ✓✓ (18)

[20]

VRAAG 3: FILTERS

3.1 'n Konstante k-filter is 'n eenvoudige T- of π-filter wat nie 'n skerp afsnyfrekwensie het nie. As prototipefilters ontwerp word, moet sowel T- as π-nette ontwerp word. (4)

3.2 'n Filter is 'n net wat só ontwerp is dat 'n sekere band van frekwensies sonder verlies deurgelaat word terwyl alle ander frekwensies verswak word. (2)

3.3 $F_C = \frac{1}{\pi\sqrt{LC}}$

$= \frac{1}{\pi\sqrt{100 \times 10^{-3} \times 2 \times 10^{-6} C}}$

$\mathbf{= 711{,}76\ Hz}$ (4)

3.4 Prototipe-onderdeurlaatfilter (2)

3.5 Onwaar (1)
[13]

VRAAG 4: ONTVANGERS EN SENDERS

4.1
- Bosyband
- Draagfrekwensie
- Ondersyband (3)

4.2 4.2.1

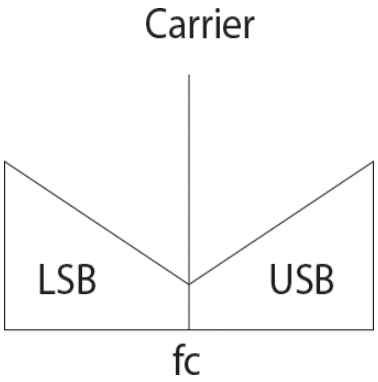

(3)

4.2.2

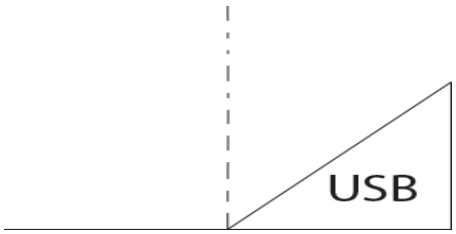

(1)

4.2.3

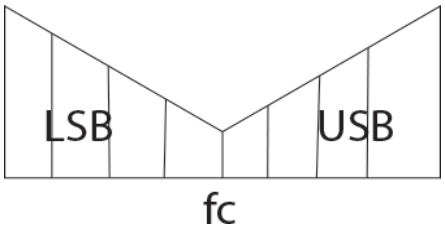

(2)

4.2.4

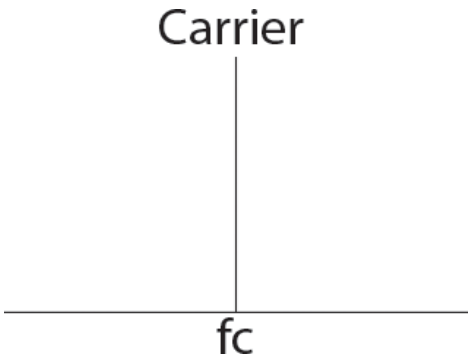

(1)

4.2.5

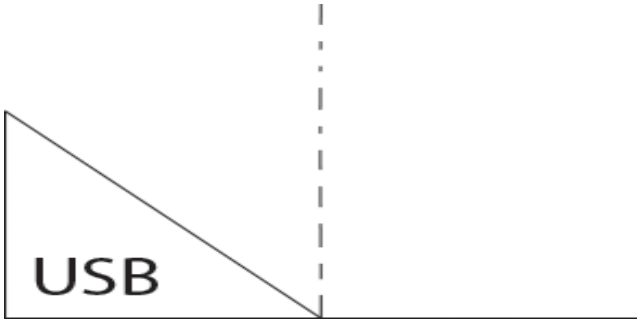

(1)

4.3

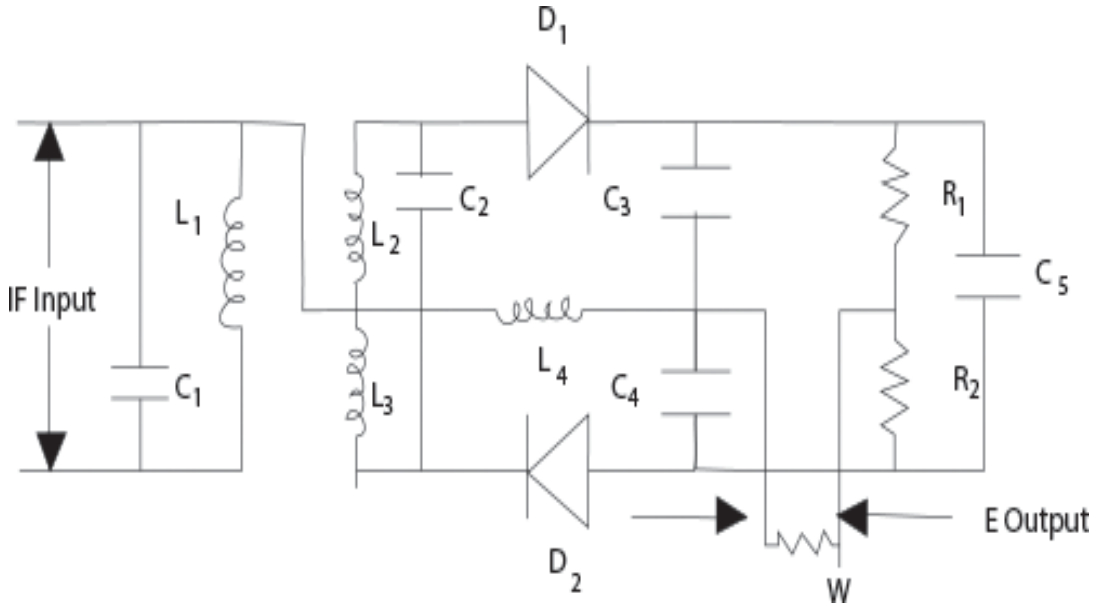

(16)

4.4 Radiodetektor (1)

[28]

VRAAG 5: ANTENNAS

5.1 Bundelbreedte is die hoekskeiding tussen die twee halfkragpunte op die pooldiagram, en is op smalbundelantennas van toepassing.

5.2 'n Antenna is 'n metaalstruktuur waarmee hoëfrekwensiestrome in elektromagnetiese golwe omgesit word.

5.3 'n Resonansieantenna is 'n oop transmissielyn van resonansielengte wat uit veelvoude van halwe golflengtes bestaan.

5.4 Effektiewe stralingsvlak is die krag wat 'n antenna ontvang, en dis direk eweredig aan die vanggebied van die antenna.

5.5 'n Halfgolfdipool bestaan uit 'n draad met golflengte $\lambda/2$ en bied lae impedansie aan die kring.

(5 × 3) **[15]**

TOTAAL: 100

Kopiereg voorbehou