higher education & training

Department:
Higher Education and Training
REPUBLIC OF SOUTH AFRICA

NASIENRIGLYN

NASIONALE SERTIFIKAAT

KOMMUNIKASIE-ELEKTRONIKA N5

1 April 2021

Hierdie nasienriglyn bestaan uit 9 bladsye.

Kopiereg voorbehou

VRAAG 1: WS-NETTE

1.1 $I_C = I_L \text{ Sin } \Theta$

$I_C = \frac{V}{X_C} = \frac{E}{\frac{1}{WC}} = EWC$

$I_C = \frac{E}{\sqrt{R^2+(x^2)}}$ (2)

$\text{Sin } \Theta = \frac{W_L}{\sqrt{R^2+w^2+L^2}}$

$EWC = \frac{E}{\sqrt{R^2+w^2+L^2}} \times \frac{W_L}{\sqrt{R^2+w^2+L^2}}$

$EWC = \frac{EWC}{R^2+W^2+L^2}$ (2)

$C = \frac{L}{R^2+W^2+L^2}$

$R^2 + W^2 + L^2 = \frac{L}{C}$

$W^2 L^2 = \frac{L}{C} - R^2$ (2)

$\frac{w^2L^2}{L^2} = \frac{L}{\frac{C}{L^2}} - \frac{R^2}{L^2}$

$W^2 = \frac{1}{LC} - \frac{R^2}{L^2}$

$W = \sqrt{\frac{1}{LC} - \frac{R^2}{L^2}}$ (2)

$2\pi = \sqrt{\frac{1}{LC} - \frac{R^2}{L^2}} \times \frac{1}{2\pi}$

$F_r = \frac{1}{2\pi}\sqrt{\frac{1}{LC} - \frac{R^2}{L^2}}$

$= \frac{1}{2\pi}\sqrt{\frac{1}{LC} - \frac{R^2}{L^2}}$ (2)

1.2 1.2.1 $F_r = \frac{1}{2\pi\sqrt{LC}}$

$= \frac{1}{2\times3,14\sqrt{(50\times10^{-6})}\times(22\times10^{-12})}$

= 4,8 mHz

1.2.2 $X_L = 2\pi fL$

$= 2 \times \pi \times 4,8 \times 10^6 \times 30 \times 10^{-6}$

= 1 508 Ω

1.2.3 $X_C = \frac{1}{2\pi fC}$

$= \frac{1}{2\times\pi\times4,8\times10^6\times22\times10^{-6}}$

= 1 508 Ω

1.2.4 $Q = \frac{WL}{R}$

$= \frac{2\times\pi FL}{R}$

$= \frac{2\times\pi\times4,8\times10^6\times30\times10^{-6}}{20}$

= 75

(4 × 2) (8)
[18]

VRAAG 2

2.1

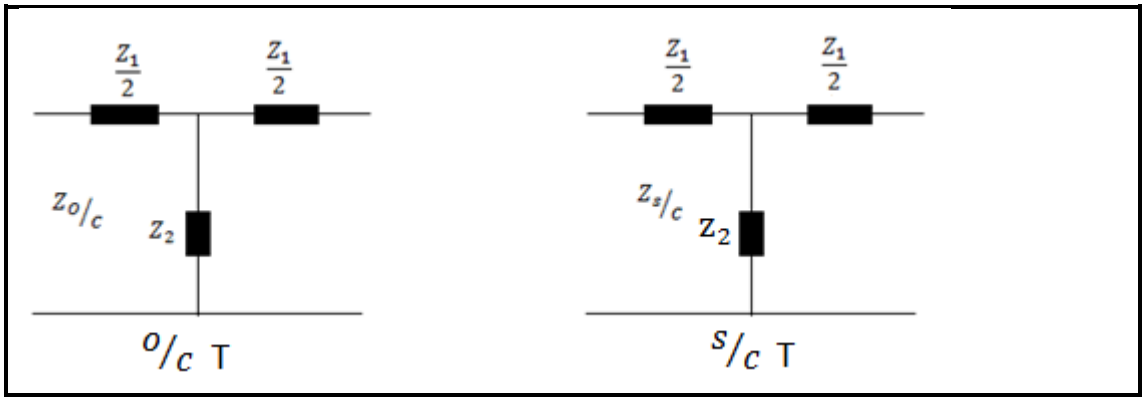

(2)

Z oop kring ($Z_{O/C}$) = $\frac{Z_1}{2} + Z_2$

Z kortsluiting ($Z_{S/C}$) = $\frac{Z_1 Z_2 + \frac{Z_1^2}{4}}{\frac{Z_1}{Z_2} + Z_2}$ (2)

Die produk van $Z_{O/C} - Z_{S/C}$

$Z_{O/C} \cdot Z_{S/C} = \left[\frac{Z_1}{2} + Z_2\right] \times \left[\frac{Z_1 Z_2 + \frac{Z_1^2}{4}}{\frac{Z_1}{Z_2} + Z_2}\right]$ (2)

$= \frac{Z_1^2}{4} + Z_1 Z_2$

$= Z_O^2$

$Z_{OT} = \sqrt{Z_{O/C} \cdot Z_{S/C}}$ (2)

Lei Z_1 en Z_2 af uit $Z_{O/C}$ en $Z_{S/C}$
Kwadraat $Z_{O/C}$

$Z_{O/C}^2 = \left(= \frac{Z_1}{2} + Z_2\right)^2$

$Z_{O/C}^2 = \frac{Z_1^2}{4} + Z_1 Z_2 + Z_2^2$

$Z_{O/C}^2 = Z_{O/C}^2 + Z_2^2$

$Z_2^2 = Z_{O/C}^2 - (Z_{O/C} \times Z_{S/C})$

$Z_2 = \sqrt{Z_{O/C} \cdot (Z_{O/C} - Z_{S/C})}$

$Z_1 = 2\sqrt{Z_{O/C} - Z_{S/C}}(Z_{O/C} - Z_{S/C})$ (3)

2.2

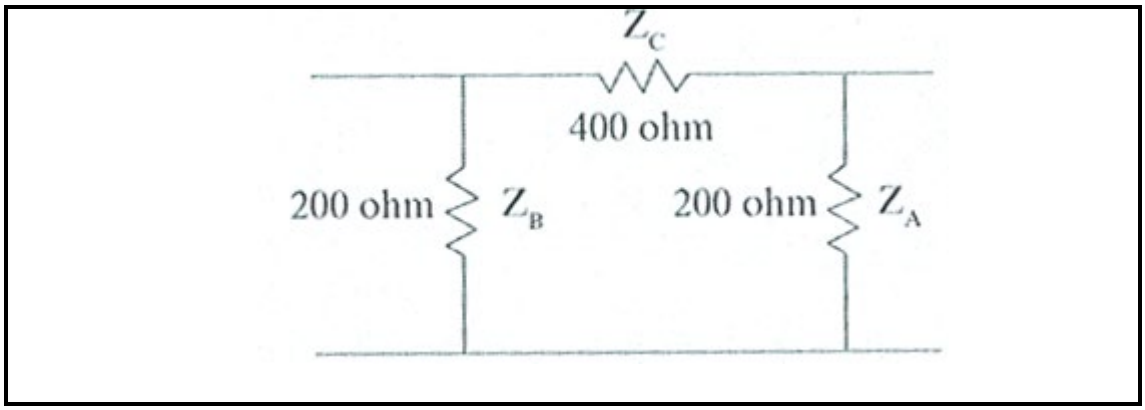

$$Z_1 = \frac{Z_B Z_C}{Z_A + Z_B Z_C}$$
$$= \frac{200 \times 400}{200 + 200 + 400}$$
$$= 100 \text{ ohm}$$
$$Z_2 = \frac{Z_C Z_A}{Z_A + Z_B Z_C}$$
$$= \frac{400 \times 200}{200 + 200 + 400}$$
$$= 100 \text{ ohm}$$
$$Z_3 = \frac{Z_A Z_B}{Z_A + Z_B Z_C}$$
$$= \frac{200 \times 200}{200 + 200 + 400}$$
$$= 50 \text{ ohm}$$

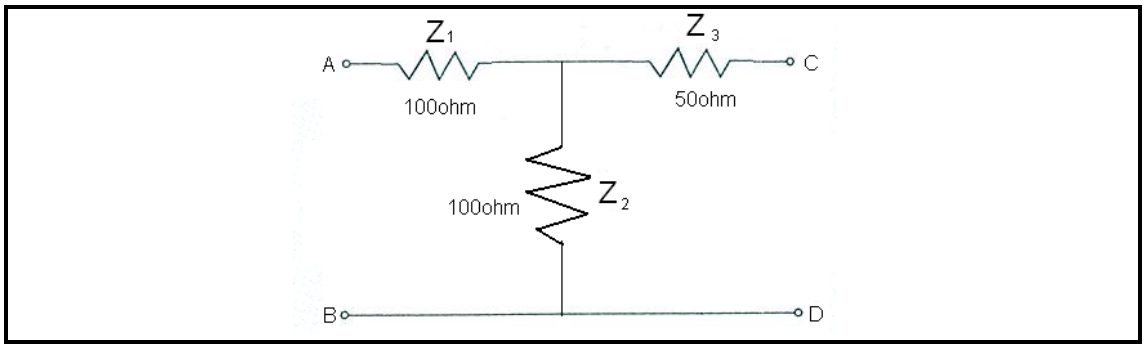

(10)
[21]

VRAAG 3

$$Z = 600$$
$$f_C = 10\,\text{kHz}$$
$$Z_1 = \frac{1}{j\omega C}$$
$$Z_2 = j\omega L$$
$$\therefore Z_O = \sqrt{\frac{j\omega L}{j\omega C} - \frac{1}{4\omega^2 C^2}}$$
$$= \sqrt{\frac{L}{C}} \times \sqrt{1 - \frac{1}{4\omega^2 LC}}$$

Vermenigvuldig

Multiplying 1 × 2:

$$Z_O \times f_C = \sqrt{\frac{L}{C}} \times \frac{1}{4\pi\sqrt{LC}}$$
$$= \frac{1}{4\pi C}$$
$$C = \frac{1}{4\pi Z_O f_C}$$

Deel 2 deur 1

Dividing 2 by 1:

$$\frac{Z_O}{f_C} = \sqrt{\frac{L}{C}} \times 4\pi\sqrt{LC}$$
$$= 4\pi L$$
$$L = \frac{Z_O}{4\pi f_C}$$

$$C = \frac{1}{4\pi Z_O f_C}$$
$$= \frac{1}{4 \times \pi \times 600 \times 10 \times 10^3}$$
$$= 13{,}27\ n\text{F}$$
$$L = \frac{Z_O}{4\pi f_C}$$
$$= \frac{600}{4 \times \pi \times 10 \times 10^3}$$
$$= 4{,}78\ m\text{H}$$

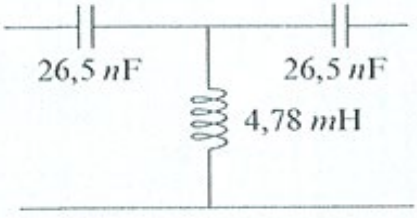

[15]

VRAAG 4

4.1 R = 60 Ω
dB = 40
N = Antilog $\frac{dB}{20}$
= antilog $\frac{40}{20}$
= 100

R_A = R (konstante impedansie)
R_A = 600 Ω
R_B = R (N – 1)
= 600 (100 – 1)
= 59,4 kΩ (4)

$R_C = \frac{R_{A^2}}{R_B}$

$= \frac{R_{A^2}}{R\ (N-1)}$

$R_C = \frac{R_A}{N-1}$

$= \frac{600}{100-1}$

= 6,061 Ω (3)

4.2 4.2.1
- Vereenvoudig die toerusting van sender en ontvanger
- Verminder koste van ontvanger
- Gebruik ’n eenvoudige ballondetektor in die ontvanger

4.2.2
- Duur en gesofistikeerde toerusting
- Minder transmissiekrag
- Smalbandwydte

(2 × 3) (6)
[13]

VRAAG 5

5.1 5.1.1 'n Yagi-Uda-antenne is 'n rignet wat bestaan uit 'n gedrewe element en een of meer parasietelemente wat kollineêr en naby mekaar gerangskik is. (3)

5.1.2

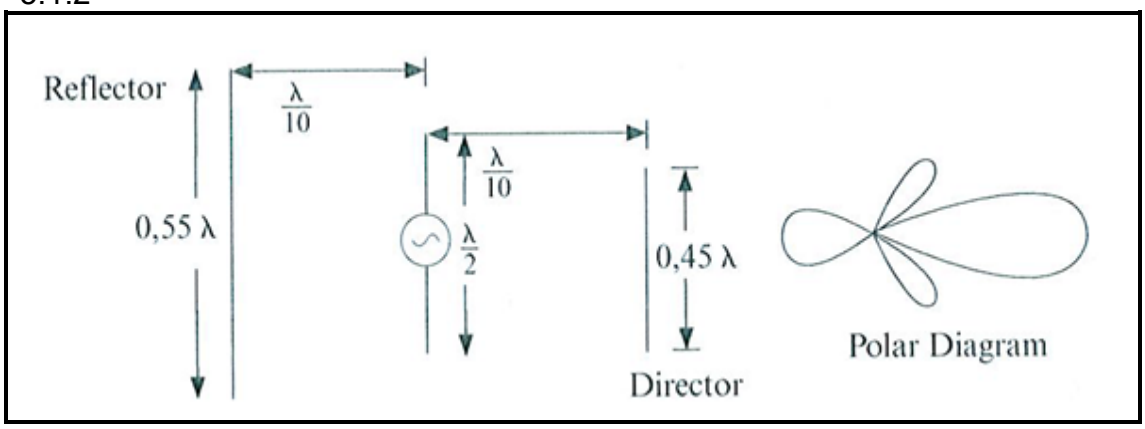

(5)

Reflector = Reflektor Director = Golfrigter Polar diagram = stralingsdiagram

5.2
- Die halfgolfdipool is baie onstabiel vir HF, VHF en UHF.
- Teen laer frekwensies is die fisiese dimensie van die lugdraad van die halfgolfdipool te groot. (2 × 2) (4)

5.3 5.3.1 'n Resonansieantenne is 'n oop transmissielyn van resonansielengte wat uit meervoudige halfgolflengtes bestaan.

5.3.2 Effektiewe stralingsvlak is die lewering wat deur 'n antenne ontvang word en is direk proporsioneel tot die vanggebied van die antenne.

(2 × 3) (6)

[18]

VRAAG 6

6.1 6.1.1 FIGUUR 3 – Integreerkring
FIGUUR 4 – Differensieerder (2)

6.1.2 Albei kringe word gebruik om 'n benadering van die frekwensie en faseresponsie van RC-kringe te bepaal. (3)

6.2

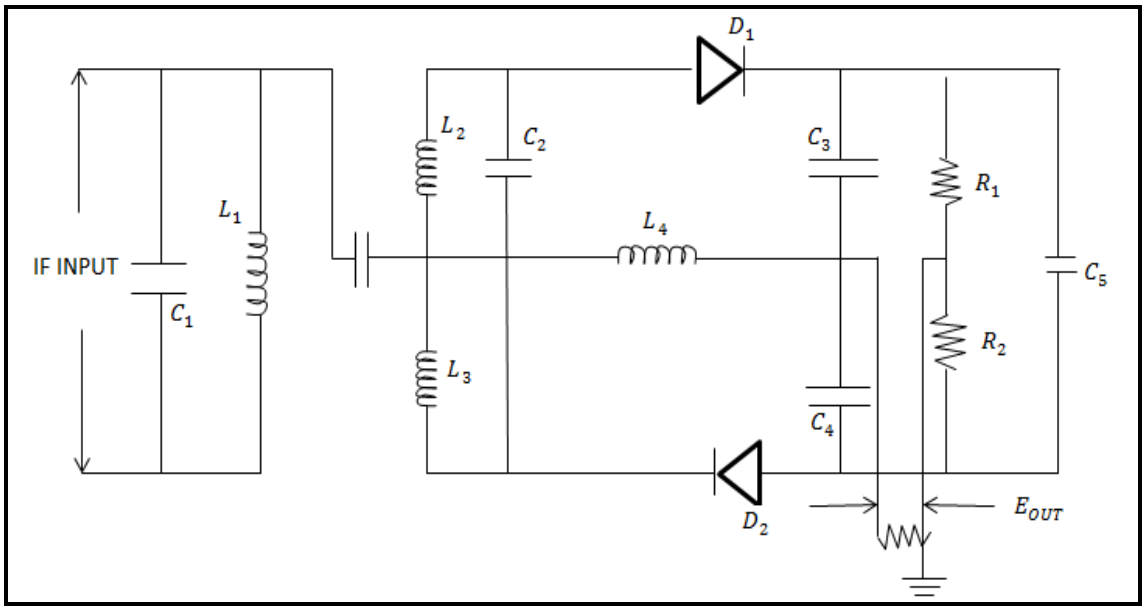

(10)
[15]

TOTAAL: 100

Kopiereg voorbehou