higher education & training

Department:
Higher Education and Training
REPUBLIC OF SOUTH AFRICA

NATIONAL CERTIFICATE

COMMUNICATION-ELECTRONICS N5

(8080235)

26 July 2021 (X-paper)
09:00–12:00

Drawing instruments and nonprogrammable calculators may be used.

This question paper consists of 5 pages and a formula sheet of 5 pages.

022Q1G2126

Copyright reserved

DEPARTMENT OF HIGHER EDUCATION AND TRAINING
REPUBLIC OF SOUTH AFRICA

NATIONAL CERTIFICATE
COMMUNICATION-ELECTRONICS N5
TIME: 3 HOURS
MARKS: 100

INSTRUCTIONS AND INFORMATION

1. Answer all the questions.
2. Read all the questions carefully.
3. Number the answers according to the numbering system used in this question paper.
4. Start each question on a new page.
5. Only use a black or blue pen.
6. Write neatly and legibly.

Copyright reserved

QUESTION 1

1.1 A supply of 20 V at a frequency of 50 Hz is connected across a parallel circuit consisting of a 1 kΩ resistor, a coil of 0,5 H and a 10 µF capacitor.

1.1.1 Draw the circuit. (2)

1.1.2 Calculate the following:

(a) The total supply current (8)

(b) The phase angle (2)

1.2 Draw the phasor diagram. (4)

1.3 Refer to FIGURE 1 (below) and do the following for a supply current of 50 A ∠ 300:

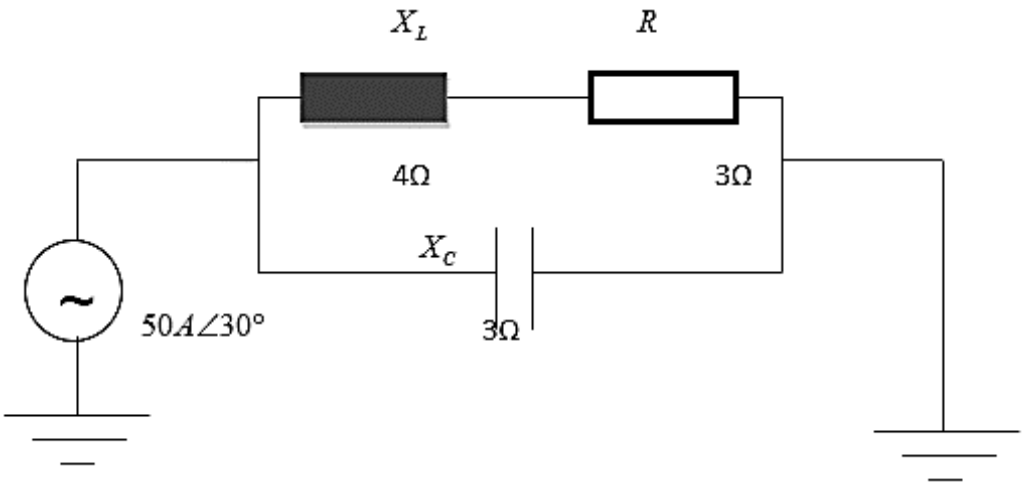

FIGURE 1

1.3.1 Calculate I_{LR}. (5)

1.3.2 Determine I_C. (4)

[25]

QUESTION 2

Consider the circuit in DIAGRAM 1 below and derive the formulae for R_A and R_B of the L-type pad from first principles.

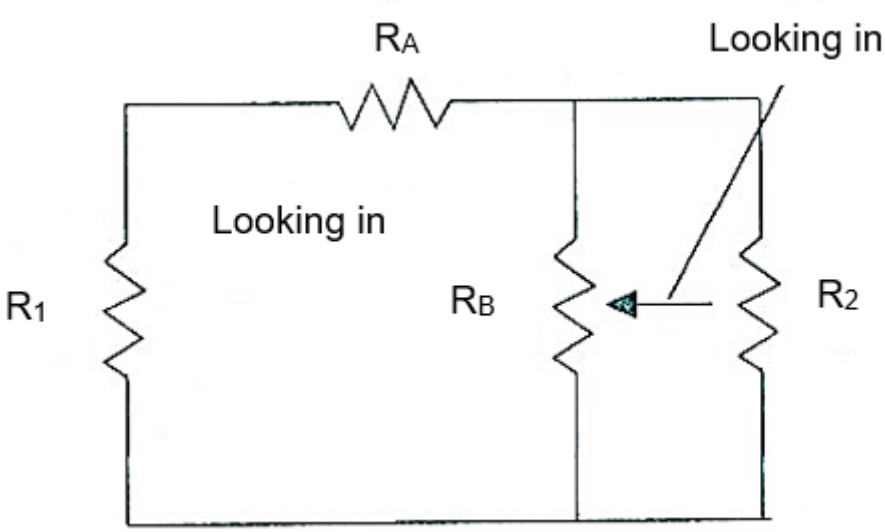

DIAGRAM 1 **[30]**

QUESTION 3

3.1 Make simple, labelled sketches to represent the following filters in terms of impedance. Write the equations for the series and shunt impedances below each sketch.

3.1.1 π-type low-pass filter

3.1.2 π-type high-pass filter

3.1.3 T-type low-pass filter

(3 × 4) (12)

3.2 Determine the cut-off frequency of a prototype having the following:

$\frac{C}{2}$ = 1 µF
L = 1 000 mH (4)

[16]

QUESTION 4

4.1 Identify the block diagram in DIAGRAM 2 below AND label all the stages shown from A–G. Write only the answer next to the letter (A–G) in the ANSWER BOOK.

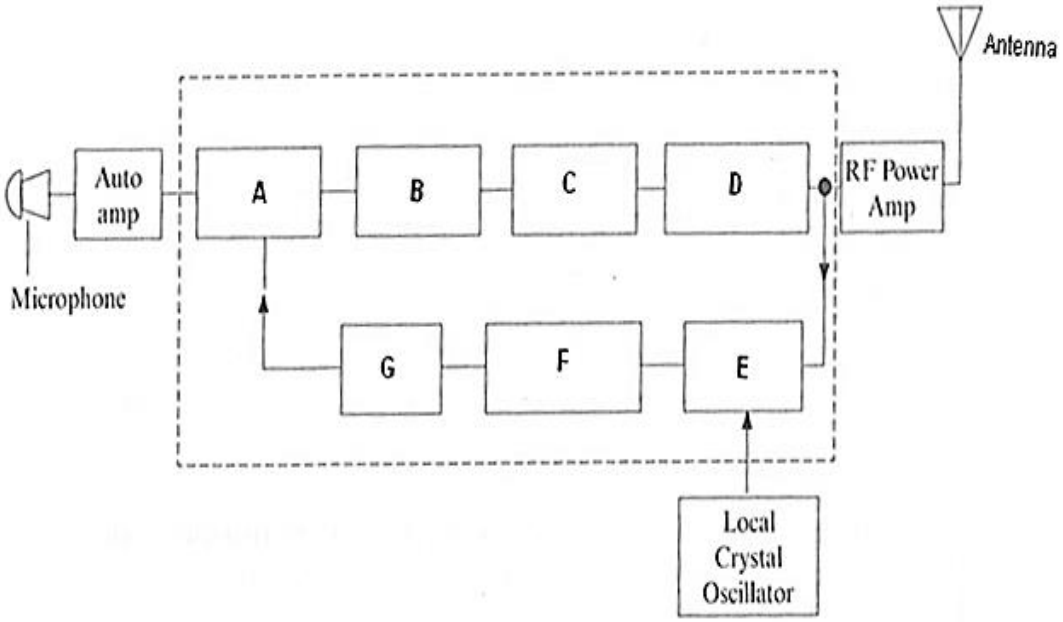

(8)

DIAGRAM 2

4.2 Draw a fully labelled circuit diagram that is used to eliminate a frequency-modulated carrier leaving the modulating signal. (12)

[20]

QUESTION 5

5.1 Define the following terms with regard to antennas:

5.1.1 Radiation resistance

5.1.2 Polarisation

(2 × 2) (4)

5.2 Give TWO disadvantages of a half-wave dipole. (2)

5.3 Define the *effective aperture* of an antenna. (3)

[9]

TOTAL: 100

Copyright reserved

FORMULA SHEET

Any applicable formula may also be used.

Inductive reactance

$$X_L = 2\pi\ fL$$

Capacitive reactance

$$X_c = \frac{1}{2\pi\ fC}$$

Series formulae

$$Z_T = \sqrt{R^2 + (X_L - X_c)^2}$$

$$\tan\theta = \frac{X_L - X_C}{R}$$

$$BW = \frac{f_o}{Q} = \frac{R}{2\pi\ L}$$

$$p.f = Cos\phi$$

$$P = VICos\phi$$

$$Y = \frac{1}{Z} = G \pm jB$$

Parallel formulae

$$I_T = \sqrt{I_R^2 + (I_C - I_L)^2}$$

$$\tan\theta = \frac{I_C - I_L}{I_R}$$

$$I_X = I_C - I_L$$

$$p.f = Cos\phi$$

$$P = VICos\phi$$

$$Y_T = Y_1 + Y_2$$

Series resonance

$$f_r = \frac{1}{2\pi\ \sqrt{LC}}$$

$$Z = R$$

$$\phi = 0°$$

$$p.f = Cos\phi = 1$$

$$Q = \frac{X_L}{R} = \frac{X_C}{R} = \frac{1}{R}\sqrt{\frac{L}{C}}$$

$$BW = \frac{f_o}{Q} = \frac{R}{2\pi\ L}$$

Parallel resonance

$$f_r = \frac{1}{2\pi}\sqrt{\frac{1}{LC} - \frac{R^2}{L^2}}$$

$$Z_D = \frac{L}{RC}$$

$$\phi = 0°$$

$$p.f = Cos\phi = 1$$

$$Q = \frac{X_L}{R} = \frac{X_C}{R} = \frac{1}{R}\sqrt{\frac{L}{C}}$$

$$BW = \frac{f_o}{Q} = \frac{R}{2\pi\ L}$$

Copyright reserved

FILTERS

Low-pass

$$R_o = \sqrt{\frac{L}{C}}$$

$$f_c = \frac{1}{\pi\sqrt{LC}}$$

$$C = \frac{1}{\pi\ R_o\ f_c}$$

$$L = \frac{R_o}{\pi\ f_c}$$

$$Z_{OT} = \sqrt{\frac{L}{C}} \times \sqrt{1 - \frac{\omega^2 LC}{4}}$$

$$Z_{o\pi} = \frac{R_o}{\sqrt{1 - \frac{\omega^2 LC}{4}}}$$

High-pass

$$R_o = \sqrt{\frac{L}{C}}$$

$$f_c = \frac{1}{4\pi\sqrt{LC}}$$

$$C = \frac{1}{4\pi\ R_o\ f_c}$$

$$L = \frac{R_o}{4\pi\ f_c}$$

$$Z_{OT} = \sqrt{\frac{L}{C}} \times \sqrt{1 - \frac{1}{4\omega^2 LC}}$$

$$Z_{o\pi} = \frac{R_o}{\sqrt{1 - \frac{1}{4\omega^2 LC}}}$$

SYMMETRICAL FOUR-TERMINAL NETWORKS

T-network

$$Z_{in} = Z_{out/uit}$$

$$Z_{OT} = \sqrt{Z_{oc} Z_{sc}}$$

$$Z_{OT} = \sqrt{\frac{Z_1^{\ 2}}{4} + Z_1 Z_2} = \frac{Z_1 Z_2}{Z_{O\pi}}$$

$$Z_1 = 2\left[Z_{oc} - \sqrt{Z_{oc}(Z_{oc} - Z_{sc})}\right]$$

$$Z_2 = \sqrt{Z_{oc}(Z_{oc} - Z_{sc})}$$

π-network

$$Z_{in} = Z_{out/uit}$$

$$Z_{O\pi} = \sqrt{Z_{oc} Z_{sc}}$$

$$Z_{O\pi} = \frac{Z_1 Z_2}{\sqrt{\frac{Z_1^{\ 2}}{4} + Z_1 Z_2}} = \frac{Z_1 Z_2}{Z_{OT}}$$

$$Z_1 = \frac{Z_{sc}\left[Z_{oc} \pm \sqrt{Z_{oc}\ (Z_{oc} - Z_{sc})}\right]}{Z_{oc} + \sqrt{Z_{oc}(Z_{oc} - Z_{sc})} - Z_{sc}}$$

$$Z_2 = \frac{1}{2}\left[Z_{oc} \pm \sqrt{Z_{oc}(Z_{oc} - Z_{sc})}\right]$$

Copyright reserved

ASYMMETRICAL FOUR-TERMINAL NETWORKS

L-section image impedance

$$Z_{o_1} = \sqrt{Z_1^2 + Z_1 Z_2}$$

$$Z_{o_2} = \frac{Z_1 Z_2}{\sqrt{Z_1^2 + Z_1 Z_2}}$$

L-section iterative impedance

$$Z'O_1 = \sqrt{\frac{Z_1^2}{4} + Z_1 Z_2} + \frac{Z_1}{2}$$

$$Z'O_2 = \sqrt{\frac{Z_1^2}{4} + Z_1 Z_2} - \frac{Z_1}{2}$$

NETWORK CONVERSIONS

T → π-conversion

$$ZA = \frac{Z_1 Z_2 + Z_2 Z_3 + Z_1 Z_3}{Z_2}$$

$$ZB = \frac{Z_1 Z_2 + Z_2 Z_3 + Z_1 Z_3}{Z_3}$$

$$ZC = \frac{Z_1 Z_2 + Z_2 Z_3 + Z_1 Z_3}{Z_1}$$

π →T-conversion

$$Z_1 = \frac{Z_A Z_B}{Z_A + Z_B + Z_C}$$

$$Z_2 = \frac{Z_B Z_C}{Z_A + Z_B + Z_C}$$

$$Z_3 = \frac{Z_A \,.\, Z_C}{Z_A + Z_B + Z_C}$$

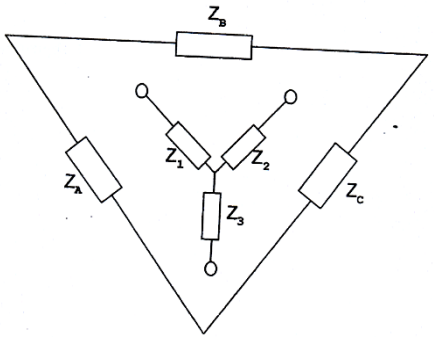

ATTENUATORS IN GENERAL

dB = 8,686 × neper

$$dB = 10 \log \left(\frac{P_{in}}{P_{uit/uit}} \right)$$

$$dB = 20 \log N$$

$$\text{Insertion loss} = 10 \log \frac{P_1}{P_2} = 20 \log \frac{I_1}{I_2}$$

Symmetrical attenuators

$$N = \frac{I_{in}}{I_{out/uit}} = \sqrt{\frac{P_{in}}{P_{out/uit}}}$$

Asymmetrical attenuators

$$N = \sqrt{\frac{P_{in}}{P_{out/uit}}}$$

Copyright reserved

T-type

$$R_a = \frac{R\,(N-1)}{N+1}$$

$$R_b = \frac{2RN}{N^2-1}$$

L-type

$$R_a = \sqrt{R_1(R_1 - R_2)}$$

$$R_b = \sqrt{\frac{R_1 R_2^2}{R_1 - R_2}}$$

π-type

$$R_a = \frac{R\,(N+1)}{N-1}$$

$$R_b = \frac{R(N^2-1)}{2N}$$

Bridged T-attenuator

$$R_a = R = Z_o$$

$$R_b = R\,(N-1)$$

$$R_c = \frac{R}{N-1}$$

MUTUAL INDUCTANCE

$$M = \sqrt{L_p \times L_s} \times k$$

$$k = \frac{M}{\sqrt{L_p P_s}}$$

$$k_c = \frac{1}{\sqrt{Q_p Q_s}}$$

$$Z_c = \frac{(\omega M)^2}{Z_s}$$

$$f_1 = \frac{f_o}{\sqrt{1+k}}$$

$$f_2 = \frac{f_o}{\sqrt{1-k}}$$

$$Q_p = \frac{X_{LP}}{R_p}$$

$$Q_s = \frac{X_{LS}}{R_s}$$

Dot rule

$$L_T = L_1 + L_2 + 2M$$

$$L_T = L_1 + L_2 - 2M$$

Copyright reserved

AM

$$m = \frac{V_m}{V_c} \qquad P_{DSB} = \frac{m^2 Pc}{2}$$

$$P_T = P_c\left(1 + \frac{m^2}{2}\right) \qquad m_T = \sqrt{m_1^2 + m_2^2}$$

$$v_c = V_C Sin\omega_C t + \frac{mV_C}{2}\cos(\omega_C - \omega_m)t - \frac{mV_C}{2}\cos(\omega_C + \omega m_m)t$$

FM

$$v_c = V_c \sin(\omega_{\cos} t - m\cos\omega_M t)$$

$$BW = f_{\text{mod}} \times (\text{number of sidebands}) \times 2$$

Shannon-Hartley

$$C = \Delta f \log_2\left(1 + \frac{S}{N}\right) \qquad dB = 10\log\left(\frac{\text{signal power}}{\text{noise power}}\right)$$

Copyright reserved