higher education & training

Department:
Higher Education and Training
REPUBLIC OF SOUTH AFRICA

MARKING GUIDELINE

NATIONAL CERTIFICATE

COMMUNICATION-ELECTRONICS N5

26 July 2021

This marking guideline consists of 7 pages.

Copyright reserved

QUESTION 1

1.1 1.1.1

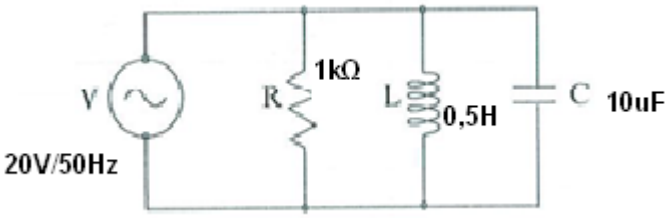

✓✓

(2)

1.1.2 (a) $IR = \frac{20}{1\,000}$

$= 0,1$ A✓ (1)

$IL = \frac{V}{XL}$

$= \frac{100}{2\pi \times 50 \times 0,5}$✓

$= 0,673$ A✓ (2)

$IC = \frac{V}{Xc}$

$= \frac{100 \times 2\pi \times 50 \times 10}{10^6}$✓

$= 0,314$ A✓ (2)

$Ix = IL - IC$

$= 0,673 - 0,314$✓

$= 0,323$ A✓ (2)

$IT = \sqrt{IR^2 + Ix^2}$

$= \sqrt{0,1^2 + 0,323^2}$

$= 0,338$ A ✓ (1)

(b) $\Theta = \tan^{-1}\frac{Ix}{IR}$

$= \tan^{-1}\frac{0,323}{0,1}$✓

$= 72°46$✓ (2)

1.2

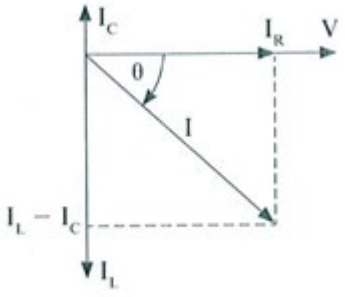

(4)

1.3 1.3.1

$$Z_{RL} = R + jX_L$$
$$Z_{RL} = 3 + j4$$
$$Z_{RL} = 5\Omega\angle 25.32°$$

$$Z_C = 0 - jX_C$$
$$Z_C = 0 - j3$$
$$Z_C = 3\Omega\angle -90° \quad ✓✓$$

$$I_{LR} = \left(\frac{Z_C}{Z_{LR} + Z_C}\right) I_S$$
$$I_{LR} = \left(\frac{3\Omega\angle -90°}{3 + j4 - j3}\right) 50A\angle 30°$$
$$I_{LR} = 75A\angle -41{,}565° \quad ✓✓✓$$ (5)

1.3.2

$$I_C = \left(\frac{Z_{LR}}{Z_{LR} + Z_C}\right) I_S$$
$$I_C = \left(\frac{5\Omega\angle 25.32°}{3 + j4 - j3}\right) 50A\angle 30°$$
$$I_C = \left(\frac{100V\angle 55{,}32°}{2\Omega\angle 18{,}433°}\right)$$
$$I_C = 50A\angle 36{,}89°$$ (4)

[25]

QUESTION 2

Looking in from R1

$$R1 = RA + \frac{RB \times R2}{RB + R2}$$ (1)

Multiply by the common denominator RB + R2

R1 (RB + R2) = RA (RB + R2) + RB. R2

R1RB + R1R2 = RARB + RAR2 + RB. R2 ……Eq. 1 (2)

Looking in from R2

$$R2 = \frac{RB(R1 + RA)}{RB + (R1 + RA)}$$

$$R2 = \frac{RBR1 + RARB}{RB + R1 + RA}$$ (2)

Multiply by the common denominator RB + R1 + RA

$$R2\,(RB + R1 + RA) = R1RB + RARB$$

$$R2\,RB + R1\,R2 + R2RA = R1RB + RARB \ldots\ldots\ldots\ldots\ldots\ldots\ldots\text{Eq. 2} \qquad (2)$$

Adding Eq. 1 and Eq. 2

$$R1RB + R1R2 = RARB + RAR2 + RB.\,R2$$

$$R2\,RB + R1\,R2 + R2RA = R1RB + RARB$$

$$2\,R1\,R2 + R1RB + R2\,RB + R2RA = 2\,RARB + RAR2 + R1RB + RB.\,R2$$

$$\therefore 2\,R1\,R2 = 2\,RARB$$

$$R1\,R2 = \frac{2RARB}{2}$$

$$R1\,R2 = RARB$$

$$\text{Hence } RA = \frac{R1R2}{RB} \qquad (5)$$

Substituting $\frac{R1R2}{RB}$ for RA in Eq. 1

$R1RB + R1R2 = RARB + RAR2 + RB.\,R2$ …… Eq. 1.

$$\therefore R1R2 + R1RB = \left(\frac{R1R2}{RB}\right)\cancel{RB} + \left(\frac{R1R2}{RB}\right)R2 + RB.\,R2$$

$$R1R2 + R1RB = R1R2 + \frac{R1R2^2}{RB} + RB.\,R2 \qquad (4)$$

Multiply by denominator RB

$$RB\,(R1R2 + R1RB) = RB\,(R1R2) + \frac{RB}{1}\left(\frac{R1R2^2}{RB}\right) + (RB.\,R2)\,RB$$

$$\cancel{RB\,R1R2} + R1RB^2 = \cancel{RB\,R1R2} + R1R2^2 + R2\,RB^2$$

$$R1RB^2 = R1R2^2 + R2\,RB^2$$

$$R1RB^2 - R2\,RB^2 = R1R2^2 \qquad (3)$$

Taking the common factor RB^2

$$RB^2\,(R1 - R2) = R1R2^2$$

$$\therefore RB^2 = \frac{R1R2^2}{R1-R2}$$

$$\text{Then } RB = \sqrt{\frac{R1R2^2}{R1-R2}} \qquad (2)$$

Copyright reserved

To find RA divide: $RA = \frac{R1R2}{RB}$

$$\therefore RA = \frac{R1 - R2}{\sqrt{\frac{R1R2^2}{R1-R2}}}$$

$$= \frac{R1\ R2}{\sqrt{R1R2^2}} \div \frac{1}{\sqrt{R1-R2}}$$

$$= \frac{R1\ R2}{\sqrt{R1R2^2}} \times \frac{\sqrt{R1-R2}}{1}$$

$$= \frac{R1\ \cancel{R2}}{\cancel{R2}\sqrt{R1}} \times \frac{\sqrt{R1-R2}}{1}$$

$$= \frac{R1}{\sqrt{R1}} \times \frac{\sqrt{R1-R2}}{1}$$

$$= \frac{\sqrt{R1}\ .\sqrt{R1}}{\sqrt{R1}} \times \frac{\sqrt{R1-R2}}{1}$$

$$= \frac{(\sqrt{R1}\ .\cancel{\sqrt{R1}})}{\cancel{\sqrt{R1}}} \times \frac{\sqrt{R1-R2}}{1}$$

$$= \sqrt{R1} \times \sqrt{R1-R2}$$

$$RA = \sqrt{R1(R1-R2)}$$

(9)
[30]

QUESTION 3

3.1 3.1.1

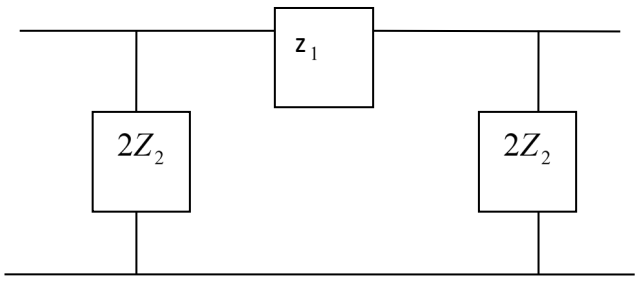

$$Z_1 = j\omega L; \qquad Z_2 = \frac{1}{j\omega C}$$

3.1.2

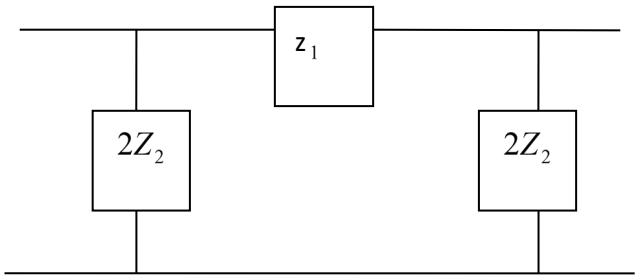

$$Z_1 = \frac{1}{j\omega C}; \qquad Z_2 = j\omega L$$

3.1.3

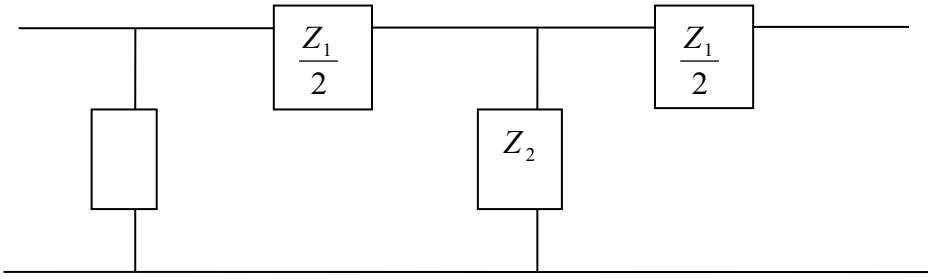

$$Z_1 = j\omega L; \qquad Z_2 = \frac{1}{j\omega C}$$

(3 × 4) (12)

3.2 $F_C = \frac{1}{\pi\sqrt{LC}}$✓

$= \frac{1}{\pi\sqrt{100 \times 10^{-3} \times 2 \times 10^{-6} C}}$✓✓

= 711,76 Hz✓ (4)

[16]

QUESTION 4

4.1 Automatic frequency control (AFC) for a typical FM transmitter (1)

A Reactance tube
B Modulator oscillator
C Harmonic generator amplifier 1
D Harmonic generator amplifier 2
E Mixer
F Mixer FM discriminator
G DC amplifier (7 × 1) (7)

4.2

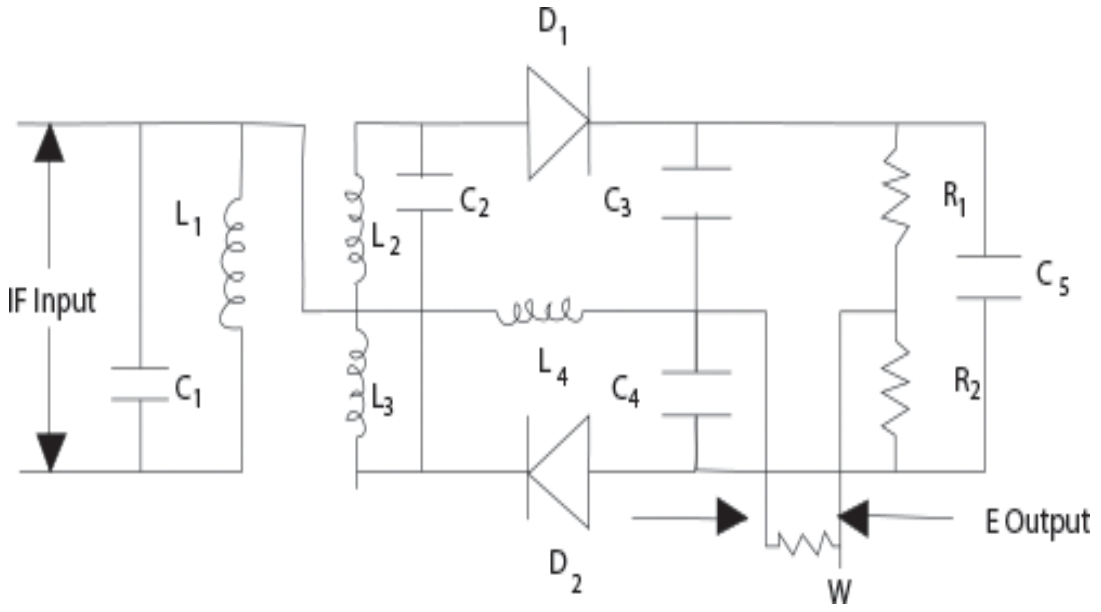

(12)
[20]

QUESTION 5

5.1 5.1.1 The ratio of the power radiated by an antenna to the square of the current at the feed point

5.1.2 The direction in space of the electric vector of the electromagnetic wave radiated from an antenna, and is parallel to the antenna itself
(2 × 2) (4)

5.2 The half-wave dipole is very unstable for HF, VHF and UHF.
At lower frequencies, the physical dimension of the aerial of the half-wave dipole is too large. (2)

5.3 Effective aperture is the physical dimensions of the antenna that determine the power received by an antenna and is directly proportional to the collecting area of the antenna. (3)
[9]

TOTAL: 100

Copyright reserved