higher education & training

Department:
Higher Education and Training
REPUBLIC OF SOUTH AFRICA

T390**(E)**(J24)T

# NATIONAL CERTIFICATE

# COMMUNICATION-ELECTRONICS N5

(8080235)

**24 July 2018 (X-Paper)**
**09:00–12:00**

**This question paper consists of 6 pages and a formula sheet of 5 pages.**

Copyright reserved

# DEPARTMENT OF HIGHER EDUCATION AND TRAINING
# REPUBLIC OF SOUTH AFRICA

NATIONAL CERTIFICATE
COMMUNICATION-ELECTRONICS N5
TIME: 3 HOURS
MARKS: 100

---

**INSTRUCTIONS AND INFORMATION**

1. Answer ALL the questions.
2. Read ALL the questions carefully.
3. Number the answers according to the numbering system used in this question paper.
4. Write neatly and legibly.

---

ECS

Copyright reserved 

## QUESTION 1: AC NETWORKS

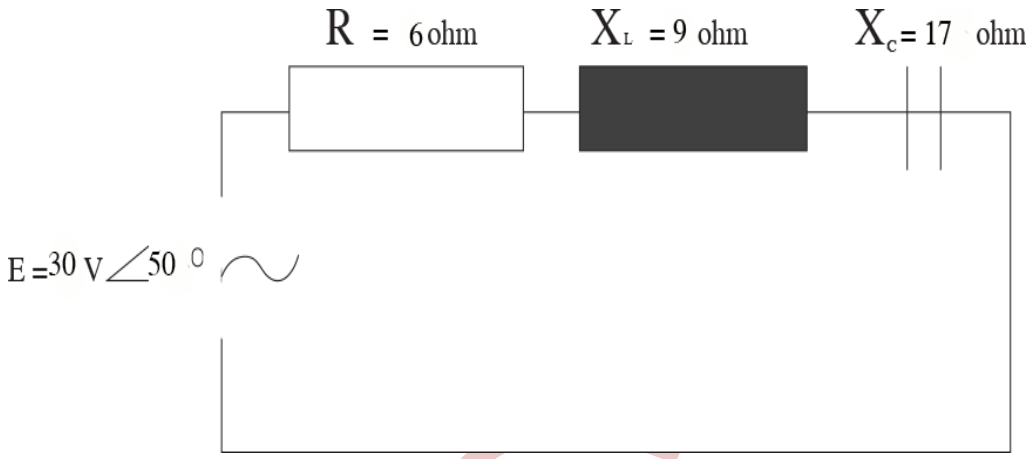


**FIGURE 1**

Refer to FIGURE 1 and determine by calculation the following quantities:

| | | |
|---|---|---|
| 1.1 | $I_T$ | (3) |
| 1.2 | $V_R$ | (2) |
| 1.3 | $V_L$ | (2) |
| 1.4 | $V_R^2/R$ | (2) |
| 1.5 | $P_T$ | (2) |
| 1.6 | Θ and EI Cos θ | (4) |
| 1.7 | $I^2R$ | (2) |
| 1.8 | ER | (2) |
| 1.9 | $I^2Z$ | (2) |
| 1.10 | $E^2/Z$ | (3) |

**[24]**

Copyright reserved 

## QUESTION 2: FOUR-TERMINAL NETWORKS

2.1 Define *insertion loss* of a four-terminal network. (2)

2.2 Develop expressions for transformation from a π-network (FIGURE 2) to a T-network (FIGURE 3) and find all values of the equivalent T-circuit with ZA, ZB and ZC having values of 367 Ω, 1 486 Ω and 367 Ω respectively.

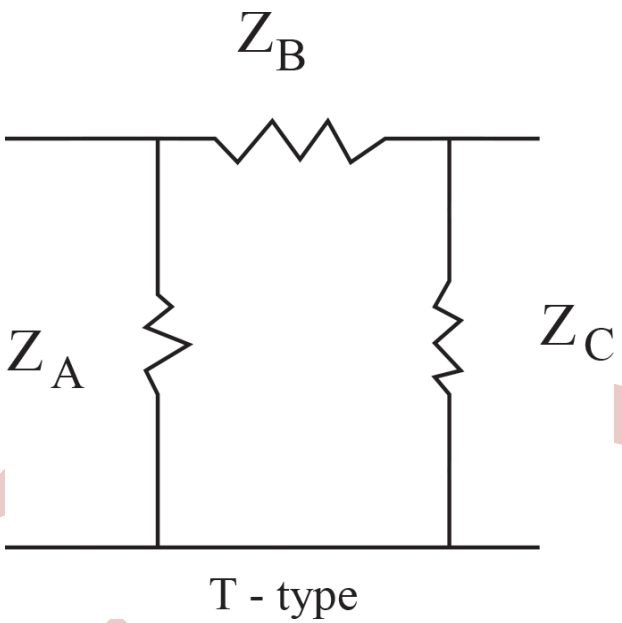


**FIGURE 2**

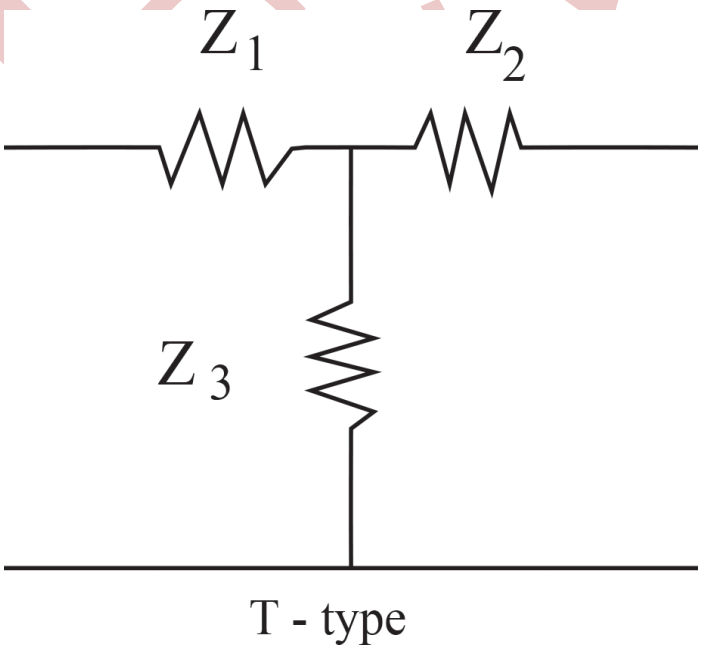


**FIGURE 3**

(18)
**[20]**

## QUESTION 3: FILTERS

3.1 Describe a constant k-filter in detail. (4)

3.2 Define a *filter.* (2)

3.3 Determine the cut-off frequency of a prototype having the following:

$\frac{C}{2}$ = 1 µF
L = 1 000 mH (4)

3.4 Name the type of filter determined in QUESTION 3.3. (2)

3.5 Indicate whether the following statement is TRUE or FALSE. Choose the answer and write only 'True' of 'False' next to the question number (3.5) in the ANSWER BOOK.

Some LC filters use resistance. (1)
**[13]**

## QUESTION 4: RECEIVERS AND TRANSMITTERS

4.1 Name THREE components that the carrier wave contains. (3)

4.2 Use simple sketches to represent the frequency spectrum of the RF signal from an AM transmitter when each of the following is transmitted:

4.2.1 The RF carrier and both sidebands (3)

4.2.2 The upper sideband only (1)

4.2.3 The upper and lower sidebands without the carrier (2)

4.2.4 The RF carrier only (1)

4.2.5 The lower sideband only (1)

4.3 Draw a fully labelled circuit diagram which is used to eliminate a frequency-modulated carrier leaving the modulating signal. (16)

4.4 Name the circuit in QUESTION 4.3. (1)
**[28]**

Copyright reserved 

**QUESTION 5: ANTENNAS**

Describe each of the following terms:

5.1 Beam width

5.2 Antenna

5.3 Resonant antenna

5.4 Aperture

5.5 Half-wave dipole

(5 × 3) **[15]**

**TOTAL: 100**

Copyright reserved

## FORMULA SHEET

Any applicable formula may also be used.

### Inductive reactance

$$X_L = 2\pi fL$$

### Capacitive reactance

$$X_c = \frac{1}{2\pi fC}$$

### Series formulae

$$Z_T = \sqrt{R^2 + (X_L - X_c)^2}$$

$$\tan\theta = \frac{X_L - X_c}{R}$$

$$BW = \frac{f_o}{Q} = \frac{R}{2\pi L}$$

$$p.f = Cos\phi$$

$$P = VICos\phi$$

$$Y = \frac{1}{Z} = G \pm jB$$

### Parallel formulae

$$I_T = \sqrt{I_R^2 + (I_C - I_L)^2}$$

$$\tan\theta = \frac{I_C - I_L}{I_R}$$

$$I_X = I_C - I_L$$

$$p.f = Cos\phi$$

$$P = VICos\phi$$

$$Y_T = Y_1 + Y_2$$

### Series resonance

$$f_r = \frac{1}{2\pi\sqrt{LC}}$$

$$Z = R$$

$$\phi = 0°$$

$$p.f = Cos\phi = 1$$

$$Q = \frac{X_L}{R} = \frac{X_C}{R} = \frac{1}{R}\sqrt{\frac{L}{C}}$$

$$BW = \frac{f_o}{Q} = \frac{R}{2\pi L}$$

### Parallel resonance

$$f_r = \frac{1}{2\pi}\sqrt{\frac{1}{LC} - \frac{R^2}{L^2}}$$

$$Z_D = \frac{L}{RC}$$

$$\phi = 0°$$

$$p.f = Cos\phi = 1$$

$$Q = \frac{X_L}{R} = \frac{X_C}{R} = \frac{1}{R}\sqrt{\frac{L}{C}}$$

$$BW = \frac{f_o}{Q} = \frac{R}{2\pi L}$$

Copyright reserved 

## FILTERS:

### Low pass

$$R_o = \sqrt{\frac{L}{C}}$$

$$f_c = \frac{1}{\pi\sqrt{LC}}$$

$$C = \frac{1}{\pi\ R_o\ f_c}$$

$$L = \frac{R_o}{\pi\ f_c}$$

$$Z_{OT} = \sqrt{\frac{L}{C}} \times \sqrt{1 - \frac{\omega^2 LC}{4}}$$

$$Z_{o\pi} = \frac{R_o}{\sqrt{1 - \frac{\omega^2 LC}{4}}}$$

### High pass

$$R_o = \sqrt{\frac{L}{C}}$$

$$f_c = \frac{1}{4\pi\sqrt{LC}}$$

$$C = \frac{1}{4\pi\ R_o\ f_c}$$

$$L = \frac{R_o}{4\pi\ f_c}$$

$$Z_{OT} = \sqrt{\frac{L}{C}} \times \sqrt{1 - \frac{1}{4\omega^2 LC}}$$

$$Z_{o\pi} = \frac{R_o}{\sqrt{1 - \frac{1}{4\omega^2 LC}}}$$

## SYMMETRICAL FOUR-TERMINAL NETWORKS:

### T- Network

$$Z_{in} = Z_{out/uit}$$

$$Z_{OT} = \sqrt{Z_{oc} Z_{sc}}$$

$$Z_{OT} = \sqrt{\frac{Z_1^{\ 2}}{4} + Z_1 Z_2} = \frac{Z_1 Z_2}{Z_{O\pi}}$$

$$Z_1 = 2\left[Z_{oc} - \sqrt{Z_{oc}(Z_{oc} - Z_{sc})}\right]$$

$$Z_2 = \sqrt{Z_{oc}(Z_{oc} - Z_{sc})}$$

### π -Network

$$Z_{in} = Z_{out/uit}$$

$$Z_{O\pi} = \sqrt{Z_{oc} Z_{sc}}$$

$$Z_{O\pi} = \frac{Z_1 Z_2}{\sqrt{\frac{Z_1^{\ 2}}{4} + Z_1 Z_2}} = \frac{Z_1 Z_2}{Z_{OT}}$$

$$Z_1 = \frac{Z_{sc}\left[Z_{oc} \pm \sqrt{Z_{oc}\ (Z_{oc} - Z_{sc})}\right]}{Z_{oc} + \sqrt{Z_{oc}(Z_{oc} - Z_{sc})} - Z_{sc}}$$

$$Z_2 = \frac{1}{2}\left[Z_{oc} \pm \sqrt{Z_{oc}(Z_{oc} - Z_{sc})}\right]$$

Copyright reserved 

## ASYMMETRICAL FOUR-TERMINAL NETWORKS:

### L-section image impedance

$$Z_{o_1} = \sqrt{Z_1^2 + Z_1 Z_2}$$

$$Z_{o_2} = \frac{Z_1 Z_2}{\sqrt{Z_1^2 + Z_1 Z_2}}$$

### L-section iterative impedance

$$Z'O_1 = \sqrt{\frac{Z_1^2}{4} + Z_1 Z_2} + \frac{Z_1}{2}$$

$$Z'O_2 = \sqrt{\frac{Z_1^2}{4} + Z_1 Z_2} - \frac{Z_1}{2}$$

## NETWORK CONVERSIONS:

### T → π conversion

$$ZA = \frac{Z_1 Z_2 + Z_2 Z_3 + Z_1 Z_3}{Z_2}$$

$$ZB = \frac{Z_1 Z_2 + Z_2 Z_3 + Z_1 Z_3}{Z_3}$$

$$ZC = \frac{Z_1 Z_2 + Z_2 Z_3 + Z_1 Z_3}{Z_1}$$

### π →T-conversion

$$Z_1 = \frac{Z_A Z_B}{Z_A + Z_B + Z_C}$$

$$Z_2 = \frac{Z_B Z_C}{Z_A + Z_B + Z_C}$$

$$Z_3 = \frac{Z_A \,.\, Z_C}{Z_A + Z_B + Z_C}$$

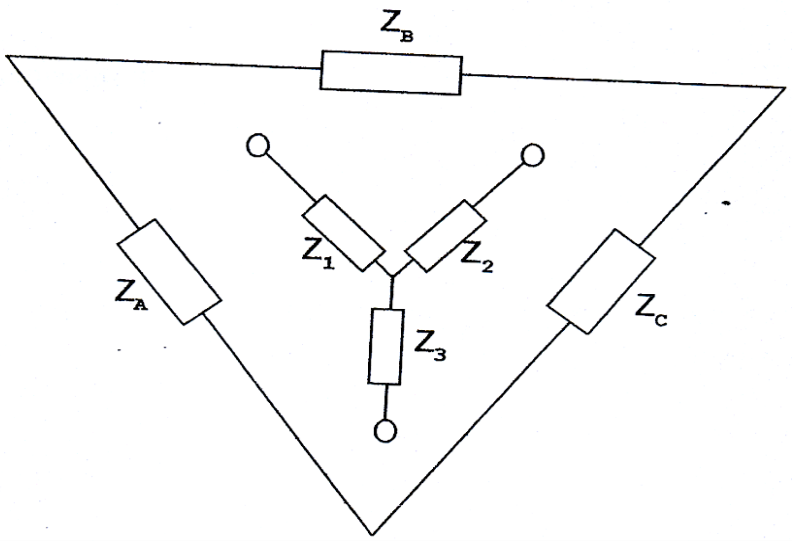


## ATTENUATORS IN GENERAL:

$dB$ = 8,686 × Neper

$$dB = 10 \log \left( \frac{P_{in}}{P_{uit/uit}} \right)$$

$dB$ = 20 log N

$$\text{Insertion loss} = 10 \log \frac{P_1}{P_2} = 20 \log \frac{I_1}{I_2}$$

Copyright reserved 

### Symmetrical attenuators

$$N = \frac{I_{in}}{I_{out/uit}} = \sqrt{\frac{P_{in}}{P_{out/uit}}}$$

### Asymmetrical attenuators

$$N = \sqrt{\frac{P_{in}}{P_{out/uit}}}$$

### T-type

$$R_a = \frac{R\,(N-1)}{N+1}$$

$$R_b = \frac{2RN}{N^2-1}$$

### L-type

$$R_a = \sqrt{R_1(R_1 - R_2)}$$

$$R_b = \sqrt{\frac{R_1 R_2^2}{R_1 - R_2}}$$

### π-type

$$R_a = \frac{R\,(N+1)}{N-1}$$

$$R_b = \frac{R(N^2-1)}{2N}$$

### Bridged T

$$R_a = R = Z_o$$

$$R_b = R\,(N-1)$$

$$R_c = \frac{R}{N-1}$$

### MUTUAL INDUCTANCE:

$$M = \sqrt{L_p \times L_s} \times k$$

$$k = \frac{M}{\sqrt{L_p P_s}}$$

$$k_c = \frac{1}{\sqrt{Q_p Q_s}}$$

$$Z_c = \frac{(\omega M)^2}{Z_s}$$

$$f_1 = \frac{f_o}{\sqrt{1+k}}$$

$$f_2 = \frac{f_o}{\sqrt{1-k}}$$

$$Q_p = \frac{X_{LP}}{R_p}$$

$$Q_s = \frac{X_{LS}}{R_s}$$

Copyright reserved 

## Dot rule

$$L_T = L_1 + L_2 + 2M$$
$$L_T = L_1 + L_2 - 2M$$

## AM

$$m = \frac{V_m}{V_c} \qquad P_{DSB} = \frac{m^2 Pc}{2}$$

$$P_T = P_c\left(1 + \frac{m^2}{2}\right) \qquad m_T = \sqrt{m_1^2 + m_2^2}$$

$$v_c = V_C Sin\,\omega_C t + \frac{mV_C}{2}\cos(\omega_C - \omega_m)t - \frac{mV_C}{2}\cos(\omega_C + \omega m_m)t$$

## FM

$$v_c = V_c \sin(\omega_{\cos} t - m\cos\omega_M t)$$

$$BW = f_{\text{mod}} \times (\text{number of sidebands}) \times 2$$

## Shannon-Hartley

$$C = \Delta f \log_2\left(1 + \frac{S}{N}\right) \qquad dB = 10\log\left(\frac{\text{signal power}}{\text{noise power}}\right)$$

Copyright reserved