higher education & training

Department:
Higher Education and Training
REPUBLIC OF SOUTH AFRICA

MARKING GUIDELINE

NATIONAL CERTIFICATE

COMMUNICATION-ELECTRONICS N5

24 JULY 2018

This marking guideline consists of 8 pages.

Copyright reserved

QUESTION 1: AC NETWORKS

1.1 $Z^2 = R^2 + X^2$

$Z = \sqrt{R^2 + (X_L - X_C)^2}$

$Z = \sqrt{6^2 + (7 - 15)^2}$

$= \sqrt{36 + 64}$

$= \sqrt{100}$

$= 10\ \Omega$✓✓

$I_T = \frac{V}{Z}$

$= \frac{100}{10}$

$= 10$ A✓ (3)

1.2 $V_R = I_T \times R$
$= 10 \times 6$
$= 60$ V✓✓ (2)

1.3 $V_L = I_T \times X_L$
$= 10 \times 9$
$= 90$ V✓✓ (2)

1.4 $\text{Power}\left(\frac{V_R^2}{R}\right) = \frac{V_R^2}{R}$
$= \frac{60^2}{6}$
$= 600$ W✓✓ (2)

1.5 $\text{Power (Pt)} = (I^2 \times R)$
$= 10^2 \times 6$
$= 600$ W✓✓ (2)

Copyright reserved

1.6 $\text{Power}\,(E \times I\text{Cos}\theta) = E \times I\,\text{Cos}\,\theta$

$$\text{and Cos}\theta = \frac{R}{Z}$$

$$= \frac{6}{10}$$

$$\mathbf{= 0{,}6}\checkmark$$

$$\Theta = \text{Cos}^{-1} \times \frac{R}{Z}$$

$$= \text{Cos}^{-1}\,(0{,}6)$$

$$\mathbf{= 53{,}13°}\checkmark\checkmark$$

$$\text{hence } E \times I\text{Cos}\theta = 30 \times 10 \times 0{,}6$$

$$\mathbf{= 180\ W}\checkmark$$ (4)

1.7 $\text{Power}\,(I^2R) = I^2 \times R$

$$= 10^2 \times 6$$

$$\mathbf{= 600\ W}\checkmark\checkmark$$ (2)

1.8 $E.I_T = E \times I_T$

$$= 30 \times 10$$

$$\mathbf{= 300\ W}\checkmark\checkmark$$ (2)

1.9 $I^2Z = I_T{}^2 \times Z$

$$= 10^2 \times 10$$

$$\mathbf{= 1\,000\ W}\checkmark\checkmark$$ (2)

1.10 $\text{Power ZP}(\frac{E^2}{Z}) = \frac{E^2}{Z}$

$$= \frac{30^2}{10}$$

$$\mathbf{= 90\ W}\checkmark\checkmark\checkmark$$ (3)

[24]

QUESTION 2: FOUR-TERMINAL NETWORKS

2.1 Insertion loss is the total loss of the mismatch losses combined with the attenuator losses when a network is inserted. (2)

2.2 $Z_{ab} = \frac{Z_a(Z_b+Z_c)}{Z_a+Z_b+Z_c} = Z_1 + Z_3$ ..... eq.(1)✓

$Z_{ac} = \frac{Z_b(Z_a+Z_c)}{Z_a+Z_b+Z_c} = Z_1 + Z_2$ ..... eq.(2)✓

$Z_{cd} = \frac{Z_c(Z_a+Z_c)}{Z_a+Z_b+Z_c} = Z_2 + Z_3$ .....eq.(3)✓

To determine Z_1 add eq. 1 and 2 and subtract eq. 3

i.e. $Z_1 =$ eq.(1) + eq.(2) – eq.(3)

$$= (Z_1 + Z_3) + (Z_1 + Z_2) - (Z_2 + Z_3) = \frac{Z_a(Z_b+Z_c)}{Z_a+Z_b+Z_c} + \frac{Z_b(Z_a+Z_c)}{Z_a+Z_b+Z_c} - \frac{Z_c(Z_a+Z_c)}{Z_a+Z_b+Z_c}$$

$$Z_1 + Z_3 + Z_1 + Z_2 - Z_2 - Z_3 = \frac{Z_a(Z_b+Z_c)+Z_b(Z_a+Z_c)-Z_c(Z_a+Z_b)}{Z_a+Z_b+Z_c}$$

$$2Z_1 = \frac{Z_aZ_b + Z_aZ_c + Z_bZ_a + Z_bZ_c - Z_aZ_c - Z_cZ_b}{Z_a + Z_b + Z_c}$$

$$2Z_1 = \frac{2Z_aZ_b}{Z_a + Z_b + Z_c}$$

$$\mathbf{Z_1} = \frac{\mathbf{Z_aZ_b}}{\mathbf{Z_a+Z_b+Z_c}}$$✓

To determine Z_2 add eq. 1 and 3 and subtract eq. 1

i.e. $Z_2 =$ eq.(2) + eq.(3) – eq.(1)✓✓

$$(Z_1 + Z_2) + (Z_2 + Z_3) - (Z_1 + Z_3) = \frac{Z_b(Z_a+Z_c)}{Z_a+Z_b+Z_c} + \frac{Z_c(Z_a+Z_c)}{Z_a+Z_b+Z_c} - \frac{Z_a(Z_b+Z_c)}{Z_a+Z_b+Z_c}$$

$$Z_1 + Z_2 + Z_2 + Z_3 - Z_1 - Z_3 = \frac{Z_b(Z_a+Z_c)+Z_c(Z_a+Z_c)-Z_a(Z_b+Z_c)}{Z_a+Z_b+Z_c}$$

$$2Z_2 = \frac{Z_aZ_b + Z_bZ_c + Z_aZ_c + Z_bZ_c - Z_aZ_b - Z_aZ_c}{Z_a + Z_b + Z_c}$$

$$2Z_2 = \frac{2Z_bZ_c}{Z_a + Z_b + Z_c}$$

$$\mathbf{Z_2} = \frac{\mathbf{Z_bZ_c}}{\mathbf{Z_a+Z_b+Z_c}}$$✓

To determine Z_3 add eq. 1 and 3 and subtract eq. 2

i.e. $Z_3 =$ eq.(1) + eq.(3) – eq.(2)

$$(Z_1 + Z_3) + (Z_2 + Z_3) - (Z_1 + Z_2) = \frac{Z_a(Z_b + Z_c)}{Z_a + Z_b + Z_c} + \frac{Z_c(Z_a + Z_b)}{Z_a + Z_b + Z_c} - \frac{Zb(Z_a + Z_c)}{Z_a + Z_b + Z_c}$$

$$z1 + z3 + z2 + z3 - z1 - z2 = \frac{Z_a(Z_b + Z_c) + Z_c(Z_a + Z_b) - Z_b(Z_a + Z_c)}{Z_a + Z_b + Z_c} \checkmark\checkmark\checkmark$$

$$2Z_3 = \frac{Z_aZ_b + Z_aZ_c + Z_aZ_c + Z_bZ_c - Z_aZ_b - Z_bZ_c}{Z_a + Z_b + Z_c}$$

$$2Z_3 = \frac{2Z_aZ_c}{Z_a + Z_b + Z_c}$$

$$\mathbf{Z_3} = \frac{\mathbf{Z_aZ_c}}{\mathbf{Z_a + Z_b + Z_c}} \checkmark\checkmark$$

Since $Z_1 = \frac{Z_aZ_b}{Z_a + Z_b + Z_c}$

i. e. $Z_1 = \frac{733 \times 2\,972}{733 + 2\,972 + 733}$

$= \mathbf{491\ \Omega} \checkmark\checkmark$

Since $Z_2 = \frac{Z_bZ_c}{Z_a + Z_b + Z_c}$

i. e $Z_2 = \frac{2\,972 \times 733}{733 + 2\,972 + 733}$

$= \mathbf{491\ \Omega} \checkmark\checkmark$

Since $Z_3 = \frac{Z_aZ_c}{Z_a + Z_b + Z_c}$

i. e $Z_3 = \frac{733 \times 733}{733 + 2\,972 + 733}$

$= \mathbf{121\ \Omega} \checkmark\checkmark$ (18)

[20]

QUESTION 3: FILTERS

3.1 A constant k-filter is a simple T- or π-filter which does not have a sharp cut-off frequency. When designing prototype filters both the T- and π-networks must be designed. (4)

3.2 A filter is a network designed to pass a certain band of frequencies without loss while attenuating all other frequencies. (2)

3.3 $F_C = \frac{1}{\pi\sqrt{LC}}$

$= \frac{1}{\pi\sqrt{100 \times 10^{-3} \times 2 \times 10^{-6}C}}$

$\mathbf{= 711{,}76\ Hz}$ (4)

3.4 Prototype low-pass π-type filter (2)

3.5 False (1)
[13]

QUESTION 4: RECEIVERS AND TRANSMITTERS

4.1
- Upper sideband
- Carrier frequency
- Lower sideband (3)

4.2 4.2.1

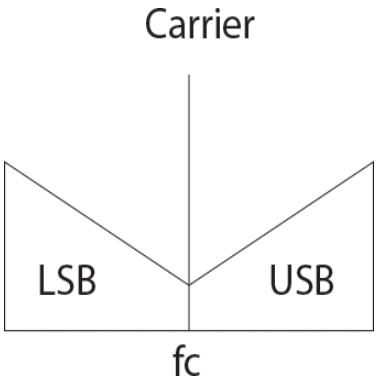

(3)

4.2.2

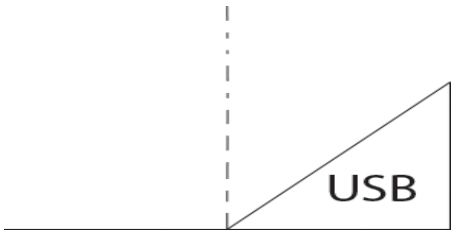

(1)

4.2.3

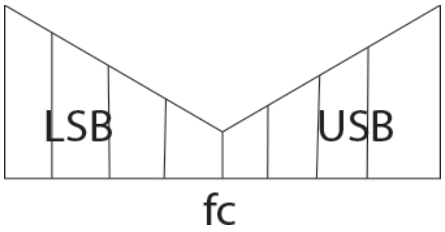

(2)

4.2.4

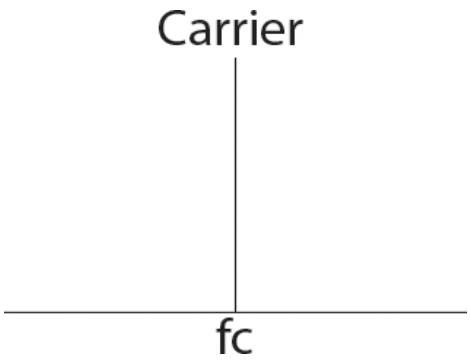

(1)

4.2.5

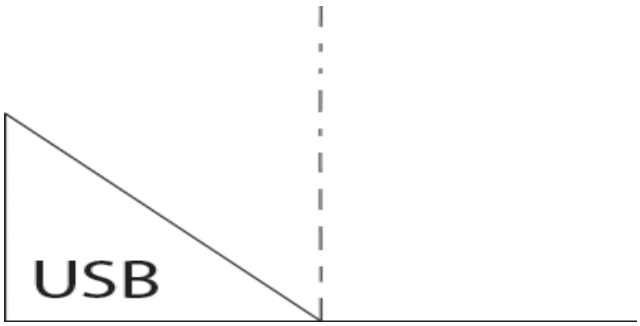

(1)

4.3

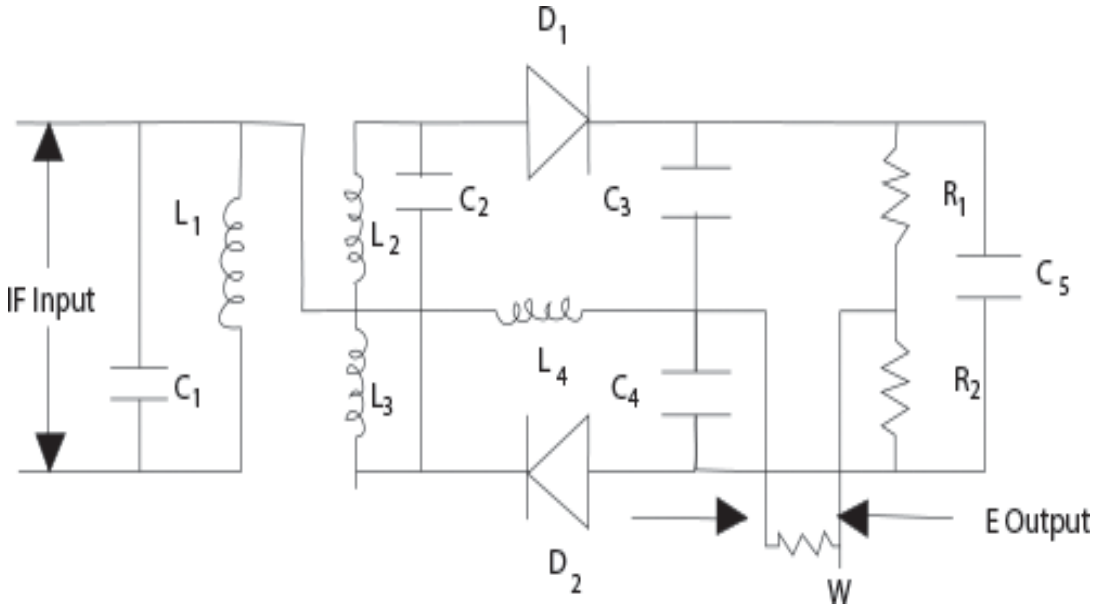

(16)

4.4 Radio detector (1)

[28]

QUESTION 5: ANTENNAS

5.1 Beam width is the angular separation between the two half-power points on the radiation pattern and applies to narrow-beam antennas.

5.2 An antenna is a metallic structure used to convert high-frequency currents into electromagnetic waves.

5.3 A resonant antenna is an open transmission line of resonant length which consists of multiple of half wavelengths.

5.4 Aperture is the power received by an antenna and is directly proportional to the collecting area of the antenna.

5.5 A half-wave dipole consists of a wire with wave length λ/2 and offers low impedance to the circuit.

(5 × 3) **[15]**

TOTAL: 100

Copyright reserved