higher education & training

Department:
Higher Education and Training
REPUBLIC OF SOUTH AFRICA

NATIONAL CERTIFICATE

COMMUNICATION ELECTRONICS N5

(8080235)

1 April 2021 (X-paper)
09:00–12:00

This question paper consists of 5 pages and a formula sheet of 5 pages.

005Q1A2101

Copyright reserved

DEPARTMENT OF HIGHER EDUCATION AND TRAINING
REPUBLIC OF SOUTH AFRICA

NATIONAL CERTIFICATE
COMMUNICATION ELECTRONICS N5
TIME: 3 HOURS
MARKS: 100

INSTRUCTIONS AND INFORMATION

1. Answer all the questions.
2. Read all the questions carefully.
3. Number the answers according to the numbering system used in this question paper.
4. Diagrams must be large, neat and clear and may be done in pencil.
5. Use only a blue or black pen.
6. Write neatly and legibly.

Copyright reserved

QUESTION 1: AC NETWORKS

1.1 Use any method to derive the equation for the resonance frequency of a parallel resonant circuit. (10)

1.2

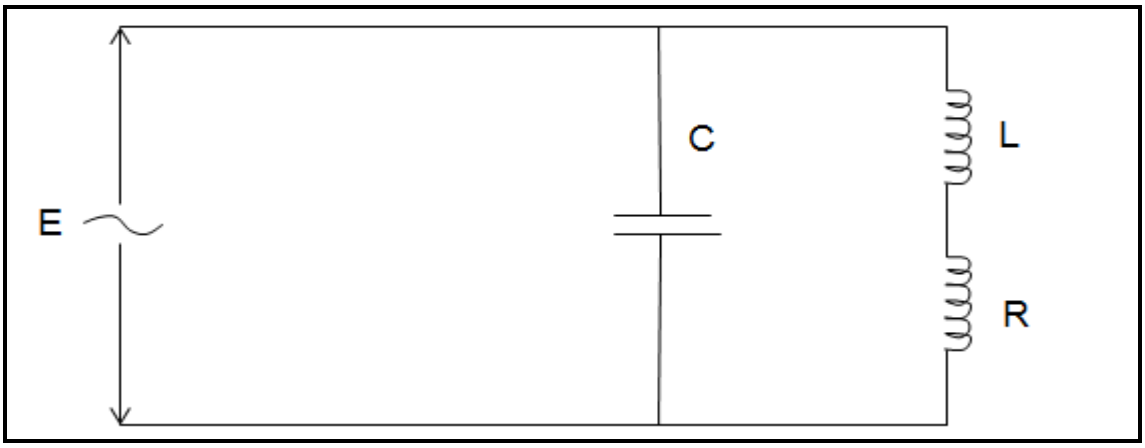

FIGURE 1

R = 20 Ω
C = 22 pF
L = 50 µH

Study FIGURE 1 and calculate the following:

1.2.1 The resonant frequency

1.2.2 The inductive resistance at resonance

1.2.3 The capacitive reactance at resonance

1.2.4 The Q-factor of the circuit

(4 × 2) (8)
[18]

QUESTION 2

2.1 Draw diagrams and derive the expression for the series impedance Z_1 of a symmetrical T-type network. (11)

2.2 Draw the π-network with the following values and convert it to a T-network:

^{Z}A = 200 ohms
^{Z}B = 200 ohms
^{Z}C = 400 ohms

(10)
[21]

QUESTION 3

Design from first principle a prototype high-pass filter with a design impedance of 600 ohms and a cut-off frequency of 10 kHz, considering the following:

- Z1 = 1/jwc
- Z2 = jwl

[15]

QUESTION 4

4.1 Determine the characteristic impedance of R_A, R_B and R_C of the bridged T-attenuator in FIGURE 2 with an attenuation of 40 dB and a characteristic impedance of 600 Ω.

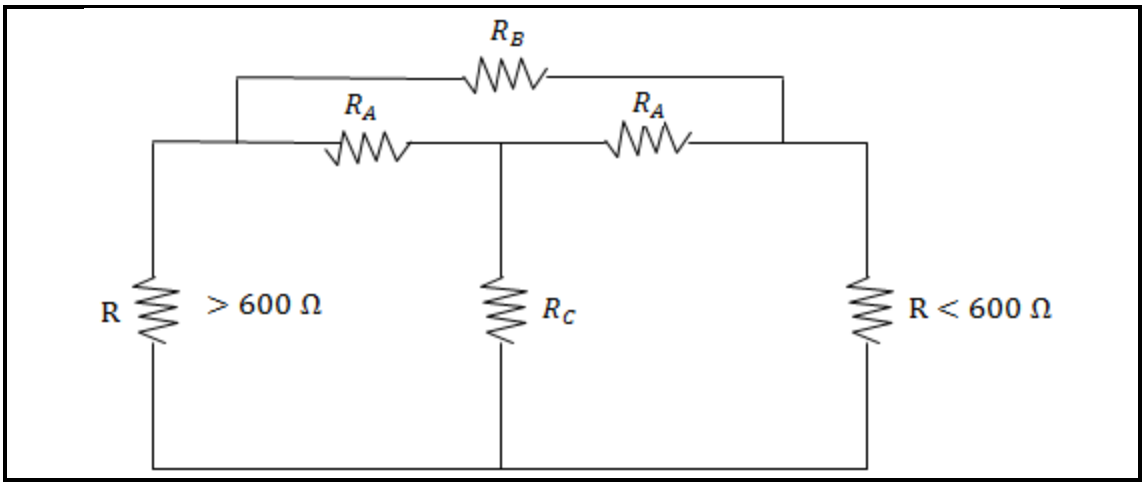

FIGURE 2 (7)

4.2 State THREE qualities of each of the following transmitters that indicate their differences:

4.2.1 Double-sideband

4.2.2 Single-sideband

(2 × 3) (6)

[13]

QUESTION 5

5.1 5.1.1 Describe the construction of a Yagi-Uda antenna. (3)

5.1.2 Make a sketch showing a reflector and radiation pattern. (5)

5.2 Sate TWO disadvantages of a half-wave dipole. (2 × 2) (4)

5.3 Describe each of the following terms:

5.3.1 Resonant antenna

5.3.2 Aperture

(2 × 3) (6)
[18]

QUESTION 6

6.1 Two RC circuits are shown in the following diagrams:

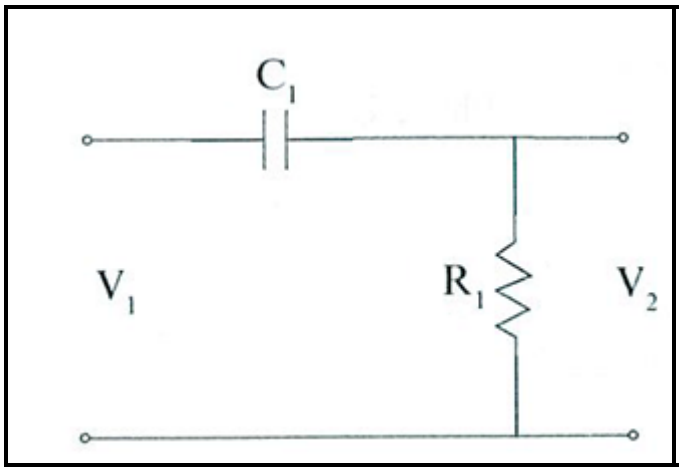

FIGURE 3

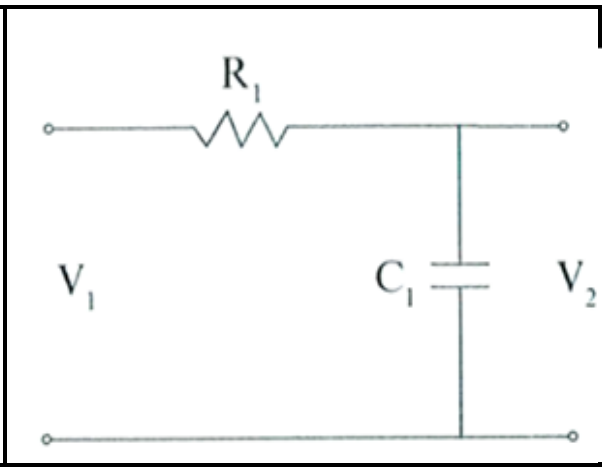

FIGURE 4

6.1.1 Name the RC circuits shown in FIGURE 3 and FIGURE 4. (2)

6.1.2 Explain the main common function of both circuits when used in RC circuits. (3)

6.2 Design and draw a clearly labelled circuit diagram of a typical full-wave detector for use in an AM receiver. (10)
[15]

TOTAL: 100

Copyright reserved

FORMULA SHEET

Any applicable formula may also be used.

Inductive reactance

$$X_L = 2\pi fL$$

Capacitive reactance

$$X_c = \frac{1}{2\pi fC}$$

Series formulae

$$Z_T = \sqrt{R^2 + (X_L - X_c)^2}$$

$$\tan\theta = \frac{X_L - X_c}{R}$$

$$BW = \frac{f_o}{Q} = \frac{R}{2\pi L}$$

$$p.f = Cos\phi$$

$$P = VICos\phi$$

$$Y = \frac{1}{Z} = G \pm jB$$

Parallel formulae

$$I_T = \sqrt{I_R^2 + (I_C - I_L)^2}$$

$$\tan\theta = \frac{I_C - I_L}{I_R}$$

$$I_X = I_C - I_L$$

$$p.f = Cos\phi$$

$$P = VICos\phi$$

$$Y_T = Y_1 + Y_2$$

Series resonance

$$f_r = \frac{1}{2\pi\sqrt{LC}}$$

$$Z = R$$

$$\phi = 0°$$

$$p.f = Cos\phi = 1$$

$$Q = \frac{X_L}{R} = \frac{X_C}{R} = \frac{1}{R}\sqrt{\frac{L}{C}}$$

$$BW = \frac{f_o}{Q} = \frac{R}{2\pi L}$$

Parallel resonance

$$f_r = \frac{1}{2\pi}\sqrt{\frac{1}{LC} - \frac{R^2}{L^2}}$$

$$Z_D = \frac{L}{RC}$$

$$\phi = 0°$$

$$p.f = Cos\phi = 1$$

$$Q = \frac{X_L}{R} = \frac{X_C}{R} = \frac{1}{R}\sqrt{\frac{L}{C}}$$

$$BW = \frac{f_o}{Q} = \frac{R}{2\pi L}$$

Copyright reserved

FILTERS

Low-pass

$$R_o = \sqrt{\frac{L}{C}}$$

$$f_c = \frac{1}{\pi\sqrt{LC}}$$

$$C = \frac{1}{\pi\ R_o\ f_c}$$

$$L = \frac{R_o}{\pi\ f_c}$$

$$Z_{OT} = \sqrt{\frac{L}{C}} \times \sqrt{1 - \frac{\omega^2 LC}{4}}$$

$$Z_{o\pi} = \frac{R_o}{\sqrt{1 - \frac{\omega^2 LC}{4}}}$$

High-pass

$$R_o = \sqrt{\frac{L}{C}}$$

$$f_c = \frac{1}{4\pi\sqrt{LC}}$$

$$C = \frac{1}{4\pi\ R_o\ f_c}$$

$$L = \frac{R_o}{4\pi\ f_c}$$

$$Z_{OT} = \sqrt{\frac{L}{C}} \times \sqrt{1 - \frac{1}{4\omega^2 LC}}$$

$$Z_{o\pi} = \frac{R_o}{\sqrt{1 - \frac{1}{4\omega^2 LC}}}$$

SYMMETRICAL FOUR-TERMINAL NETWORKS

T-network

$$Z_{in} = Z_{out/uit}$$

$$Z_{OT} = \sqrt{Z_{oc} Z_{sc}}$$

$$Z_{OT} = \sqrt{\frac{Z_1^{\ 2}}{4} + Z_1 Z_2} = \frac{Z_1 Z_2}{Z_{O\pi}}$$

$$Z_1 = 2\left[Z_{oc} - \sqrt{Z_{oc}(Z_{oc} - Z_{sc})}\right]$$

$$Z_2 = \sqrt{Z_{oc}(Z_{oc} - Z_{sc})}$$

π-network

$$Z_{in} = Z_{out/uit}$$

$$Z_{O\pi} = \sqrt{Z_{oc} Z_{sc}}$$

$$Z_{O\pi} = \frac{Z_1 Z_2}{\sqrt{\frac{Z_1^{\ 2}}{4} + Z_1 Z_2}} = \frac{Z_1 Z_2}{Z_{OT}}$$

$$Z_1 = \frac{Z_{sc}\left[Z_{oc} \pm \sqrt{Z_{oc}\ (Z_{oc} - Z_{sc})}\right]}{Z_{oc} + \sqrt{Z_{oc}(Z_{oc} - Z_{sc})} - Z_{sc}}$$

$$Z_2 = \frac{1}{2}\left[Z_{oc} \pm \sqrt{Z_{oc}(Z_{oc} - Z_{sc})}\right]$$

Copyright reserved

ASYMMETRICAL FOUR-TERMINAL NETWORKS

L-section image impedance

$$Z_{o_1} = \sqrt{Z_1^2 + Z_1 Z_2}$$

$$Z_{o_2} = \frac{Z_1 Z_2}{\sqrt{Z_1^2 + Z_1 Z_2}}$$

L-section iterative impedance

$$Z'O_1 = \sqrt{\frac{Z_1^2}{4} + Z_1 Z_2} + \frac{Z_1}{2}$$

$$Z'O_2 = \sqrt{\frac{Z_1^2}{4} + Z_1 Z_2} - \frac{Z_1}{2}$$

NETWORK CONVERSIONS

T → π-conversion

$$ZA = \frac{Z_1 Z_2 + Z_2 Z_3 + Z_1 Z_3}{Z_2}$$

$$ZB = \frac{Z_1 Z_2 + Z_2 Z_3 + Z_1 Z_3}{Z_3}$$

$$ZC = \frac{Z_1 Z_2 + Z_2 Z_3 + Z_1 Z_3}{Z_1}$$

π →T-conversion

$$Z_1 = \frac{Z_A Z_B}{Z_A + Z_B + Z_C}$$

$$Z_2 = \frac{Z_B Z_C}{Z_A + Z_B + Z_C}$$

$$Z_3 = \frac{Z_A \,.\, Z_C}{Z_A + Z_B + Z_C}$$

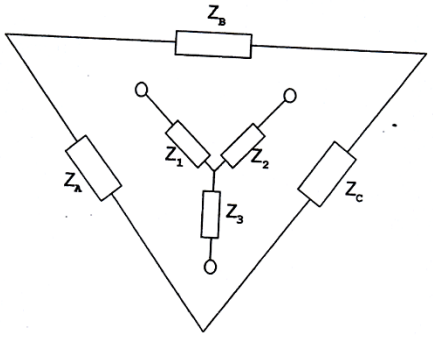

ATTENUATORS IN GENERAL

dB = 8,686 × Neper

$$dB = 10 \log \left(\frac{P_{in}}{P_{uit/uit}} \right)$$

$$dB = 20 \log N$$

$$\text{Insertion loss} = 10 \log \frac{P_1}{P_2} = 20 \log \frac{I_1}{I_2}$$

Symmetrical attenuators

$$N = \frac{I_{in}}{I_{out/uit}} = \sqrt{\frac{P_{in}}{P_{out/uit}}}$$

Asymmetrical attenuators

$$N = \sqrt{\frac{P_{in}}{P_{out/uit}}}$$

Copyright reserved

T-type

$$R_a = \frac{R\,(N-1)}{N+1}$$

$$R_b = \frac{2RN}{N^2-1}$$

L-type

$$R_a = \sqrt{R_1(R_1-R_2)}$$

$$R_b = \sqrt{\frac{R_1R_2^2}{R_1-R_2}}$$

π-type

$$R_a = \frac{R\,(N+1)}{N-1}$$

$$R_b = \frac{R(N^2-1)}{2N}$$

Bridged T-attenuator

$$R_a = R = Z_o$$

$$R_b = R\,(N-1)$$

$$R_c = \frac{R}{N-1}$$

MUTUAL INDUCTANCE

$$M = \sqrt{L_p \times L_s} \times k$$

$$k = \frac{M}{\sqrt{L_p P_s}}$$

$$k_c = \frac{1}{\sqrt{Q_p Q_s}}$$

$$Z_c = \frac{(\omega M)^2}{Z_s}$$

$$f_1 = \frac{f_o}{\sqrt{1+k}}$$

$$f_2 = \frac{f_o}{\sqrt{1-k}}$$

$$Q_p = \frac{X_{LP}}{R_p}$$

$$Q_s = \frac{X_{LS}}{R_s}$$

Dot rule

$$L_T = L_1 + L_2 + 2M$$

$$L_T = L_1 + L_2 - 2M$$

Copyright reserved

AM

$$m = \frac{V_m}{V_c} \qquad P_{DSB} = \frac{m^2 Pc}{2}$$

$$P_T = P_c\left(1 + \frac{m^2}{2}\right) \qquad m_T = \sqrt{m_1^2 + m_2^2}$$

$$v_c = V_C Sin\omega_C t + \frac{mV_C}{2}\cos(\omega_C - \omega_m)t - \frac{mV_C}{2}\cos(\omega_C + \omega m_m)t$$

FM

$$v_c = V_c \sin(\omega_{\cos} t - m\cos\omega_M t)$$

$$BW = f_{\text{mod}} \times (\text{number of sidebands}) \times 2$$

Shannon-Hartley

$$C = \Delta f \log_2\left(1 + \frac{S}{N}\right) \qquad dB = 10\log\left(\frac{\text{signal power}}{\text{noise power}}\right)$$

Copyright reserved