higher education & training

Department:
Higher Education and Training
REPUBLIC OF SOUTH AFRICA

MARKING GUIDELINE

NATIONAL CERTIFICATE

COMMUNICATION-ELECTRONICS N5

1 April 2021

This marking guideline consists of 9 pages.

Copyright reserved

QUESTION 1: AC NETWORKS

1.1 $I_C = I_L \text{ Sin } \Theta$

$I_C = \frac{V}{X_C} = \frac{E}{\frac{1}{WC}} = EWC$

$I_C = \frac{E}{\sqrt{R^2+(x^2)}}$ (2)

$\text{Sin } \Theta = \frac{W_L}{\sqrt{R^2+w^2+L^2}}$

$EWC = \frac{E}{\sqrt{R^2+w^2}+L^2} \times \frac{W_L}{\sqrt{R^2+w^2}+L^2}$

$EWC = \frac{EWC}{R^2+W^2+L^2}$ (2)

$C = \frac{L}{R^2+W^2+L^2}$

$R^2 + W^2 + L^2 = \frac{L}{C}$

$W^2 L^2 = \frac{L}{C} - R^2$ (2)

$\frac{w^2L^2}{L^2} = \frac{L}{\frac{C}{L^2}} - \frac{R^2}{L^2}$

$W^2 = \frac{1}{LC} - \frac{R^2}{L^2}$

$W = \sqrt{\frac{1}{LC} - \frac{R^2}{L^2}}$ (2)

$2\pi = \sqrt{\frac{1}{LC} - \frac{R^2}{L^2}} \times \frac{1}{2\pi}$

$F_r = \frac{1}{2\pi}\sqrt{\frac{1}{LC} - \frac{R^2}{L^2}}$

$= \frac{1}{2\pi}\sqrt{\frac{1}{LC} - \frac{R^2}{L^2}}$ (2)

1.2 1.2.1 $F_r = \frac{1}{2\pi\sqrt{LC}}$

$= \frac{1}{2\times3,14\sqrt{(50\times10^{-6})}\times(22\times10^{-12})}$

= 4,8 mHz

1.2.2 $X_L = 2\pi fL$

$= 2 \times \pi \times 4,8 \times 10^6 \times 30 \times 10^{-6}$

= 1 508 Ω

1.2.3 $X_C = \frac{1}{2\pi fC}$

$= \frac{1}{2\times\pi\times4,8\times10^6\times22\times10^{-6}}$

= 1 508 Ω

1.2.4 $Q = \frac{WL}{R}$

$= \frac{2\times\pi FL}{R}$

$= \frac{2\times\pi\times4,8\times10^6\times30\times10^{-6}}{20}$

= 75

(4 × 2) (8)
[18]

QUESTION 2

2.1

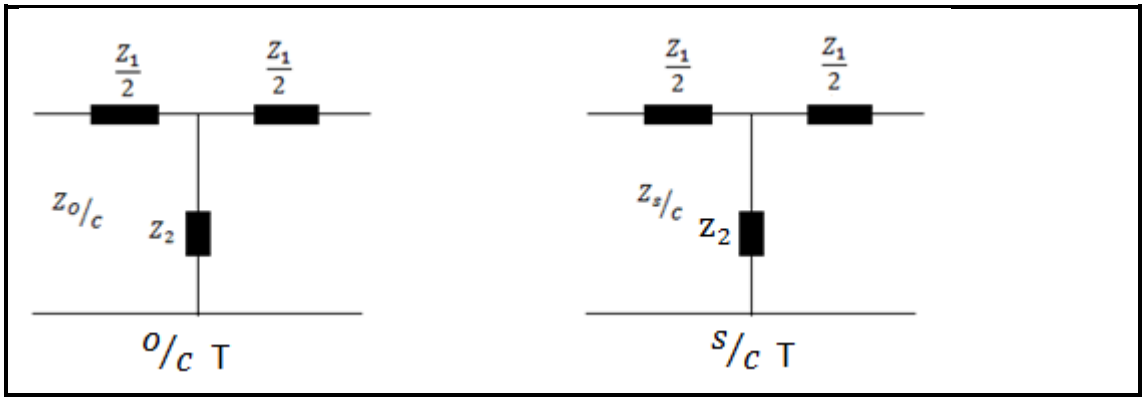

(2)

Z open circuit ($Z_{O/C}$) = $\frac{Z_1}{2}$ + Z_2

Z short circuit ($Z_{S/C}$) = $\frac{Z_1 Z_2 + \frac{Z_1^2}{4}}{\frac{Z_1}{Z_2} + Z_2}$ (2)

The product of $Z_{O/C} - Z_{S/C}$

$Z_{O/C} \cdot Z_{S/C} = \left[\frac{Z_1}{2} + Z_2\right] \times \left[\frac{Z_1 Z_2 + \frac{Z_1^2}{4}}{\frac{Z_1}{Z_2} + Z_2}\right]$ (2)

$= \frac{Z_1^2}{4} + Z_1 Z_2$

$= Z_O^2$

$Z_{OT} = \sqrt{Z_{O/C} \cdot Z_{S/C}}$ (2)

Deriving Z_1 and Z_2 from $Z_{O/C}$ and $Z_{S/C}$
Square $Z_{O/C}$

$Z_{O/C}^2 = \left(= \frac{Z_1}{2} + Z_2\right)^2$

$Z_{O/C}^2 = \frac{Z_1^2}{4} + Z_1 Z_2 + Z_2^2$

$Z_{O/C}^2 = Z_{O/C}^2 + Z_2^2$

$Z_2^2 = Z_{O/C}^2 - (Z_{O/C} \times Z_{S/C})$

$Z_2 = \sqrt{Z_{O/C} \cdot (Z_{O/C} - Z_{S/C})}$

$Z_1 = 2\sqrt{Z_{O/C} - Z_{S/C}}(Z_{O/C} - Z_{S/C})$ (3)

2.2

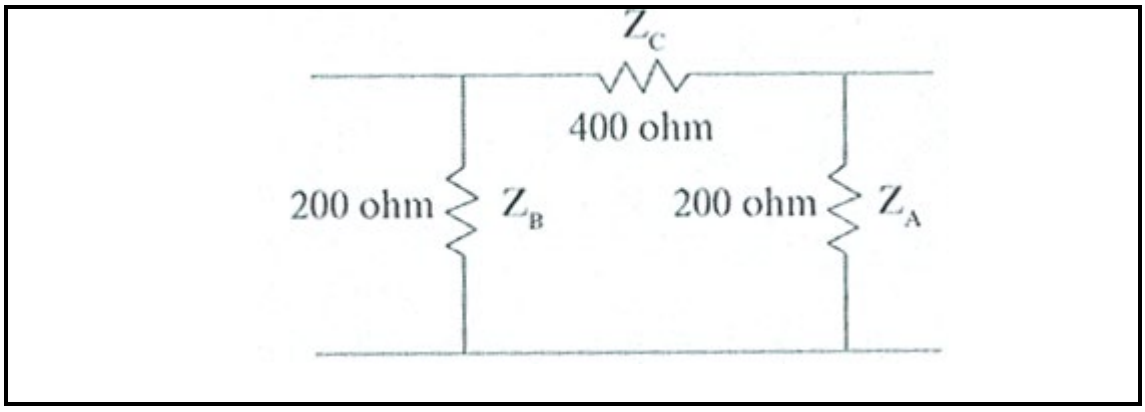

$$Z_1 = \frac{Z_B Z_C}{Z_A + Z_B Z_C}$$
$$= \frac{200 \times 400}{200 + 200 + 400}$$
$$= 100 \text{ ohm}$$
$$Z_2 = \frac{Z_C Z_A}{Z_A + Z_B Z_C}$$
$$= \frac{400 \times 200}{200 + 200 + 400}$$
$$= 100 \text{ ohm}$$
$$Z_3 = \frac{Z_A Z_B}{Z_A + Z_B Z_C}$$
$$= \frac{200 \times 200}{200 + 200 + 400}$$
$$= 50 \text{ ohm}$$

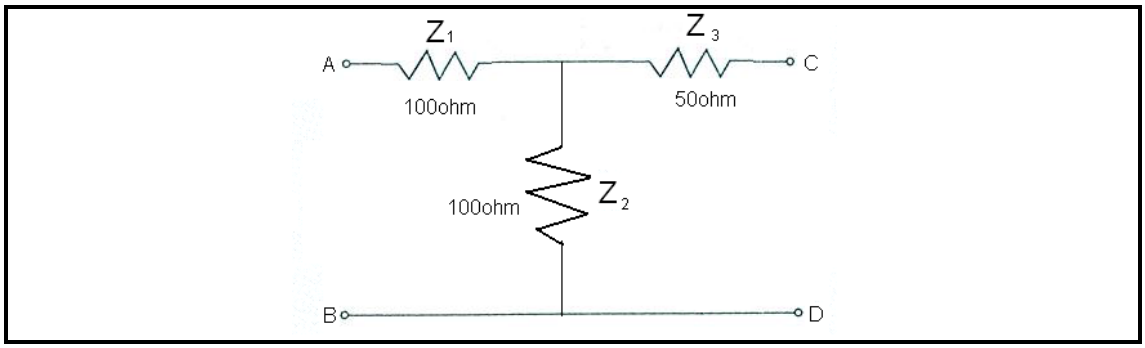

(10)
[21]

QUESTION 3

$$Z = 600$$
$$f_C = 10\,\text{kHz}$$
$$Z_1 = \frac{1}{j\omega C}$$
$$Z_2 = j\omega L$$
$$\therefore Z_O = \sqrt{\frac{j\omega L}{j\omega C} - \frac{1}{4\omega^2 C^2}}$$
$$= \sqrt{\frac{L}{C}} \times \sqrt{1 - \frac{1}{4\omega^2 LC}}$$

Multiplying 1 × 2:

$$Z_O \times f_C = \sqrt{\frac{L}{C}} \times \frac{1}{4\pi\sqrt{LC}}$$
$$= \frac{1}{4\pi C}$$
$$C = \frac{1}{4\pi Z_O f_C}$$

Dividing 2 by 1:

$$\frac{Z_O}{f_C} = \sqrt{\frac{L}{C}} \times 4\pi\sqrt{LC}$$
$$= 4\pi L$$
$$L = \frac{Z_O}{4\pi f_C}$$

$$C = \frac{1}{4\pi Z_O f_C}$$
$$= \frac{1}{4 \times \pi \times 600 \times 10 \times 10^3}$$
$$= 13{,}27\ n\text{F}$$
$$L = \frac{Z_O}{4\pi f_C}$$
$$= \frac{600}{4 \times \pi \times 10 \times 10^3}$$
$$= 4{,}78\ m\text{H}$$

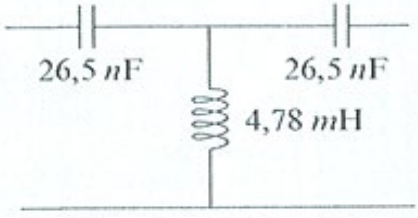

[15]

QUESTION 4

4.1 R = 60 Ω
dB = 40
N = Antilog $\frac{dB}{20}$
= antilog $\frac{40}{20}$
= 100

R_A = R (constant impedance)
R_A = 600 Ω
R_B = R (N – 1)
= 600 (100 – 1)
= 59,4 kΩ (4)

$R_C = \frac{R_{A^2}}{R_B}$

$= \frac{R_{A^2}}{R\ (N-1)}$

$R_C = \frac{R_A}{N-1}$

$= \frac{600}{100-1}$

= 6,061 Ω (3)

4.2 4.2.1
- Simplifies the equipment of transmitter and receiver
- Reduces cost of receiver
- Uses a simple envelope detector in the receiver

4.2.2
- Expensive and sophisticated equipment
- Less transmission power
- Narrow bandwidth

(2 × 3) (6)
[13]

QUESTION 5

5.1 5.1.1 A Yagi-Uda antenna is an array consisting of a driven element and one or more parasitic elements which are arranged collinearly and close together. (3)

5.1.2

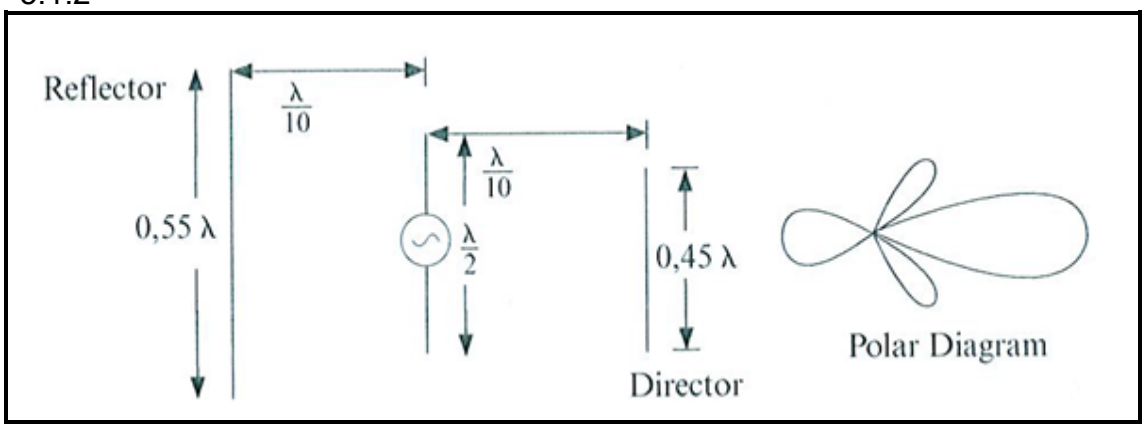

(5)

5.2
- The half-wave dipole is very unstable for HF, VHF and UHF.
- At lower frequencies the physical dimension of the aerial of the half- wave dipole is too large. (2 × 2) (4)

5.3 5.3.1 A resonant antenna is an open transmission line of resonant length which consists of multiple half-wave lengths.

5.3.2 Aperture is the power received by an antenna and is directly proportional to the collecting area of the antenna.

(2 × 3) (6)

[18]

QUESTION 6

6.1 6.1.1 FIGURE 3 – Integrator
FIGURE 4 – Differentiator (2)

6.1.2 Both circuits are used to determine an approximation of the frequency and phase response of RC circuits. (3)

6.2

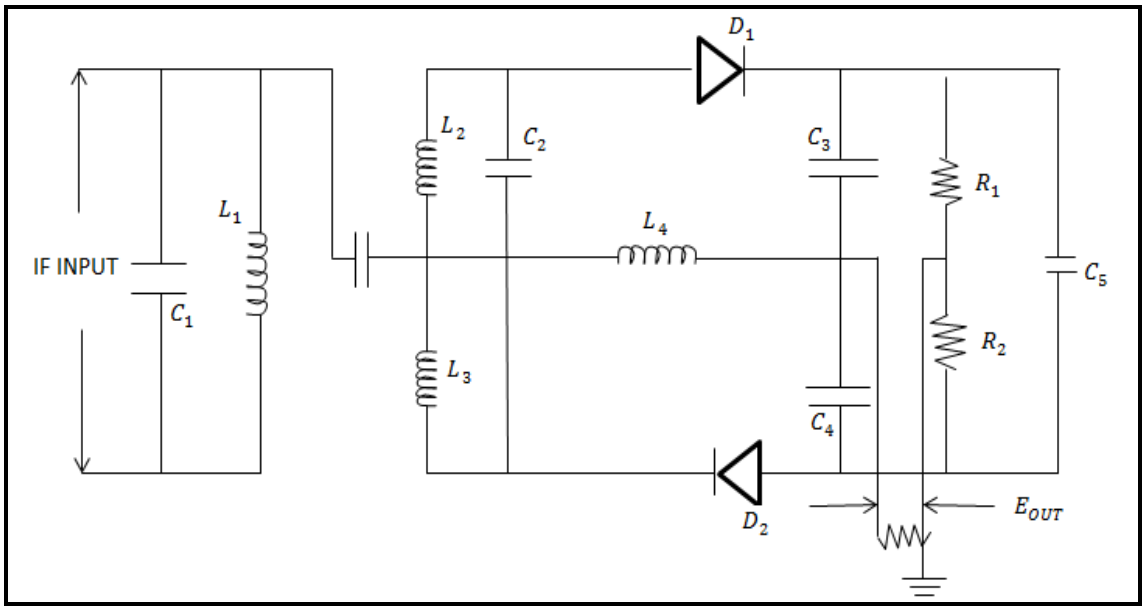

(10)
[15]

TOTAL: 100

Copyright reserved