higher education & training

Department:
Higher Education and Training
REPUBLIC OF SOUTH AFRICA

NATIONAL CERTIFICATE

COMMUNICATION-ELECTRONICS N5

(8080235)

31 March 2020 (X-paper)
09:00–12:00

This question paper consists of 5 pages.

018Q1A2031

Copyright reserved

DEPARTMENT OF HIGHER EDUCATION AND TRAINING
REPUBLIC OF SOUTH AFRICA

NATIONAL CERTIFICATE
COMMUNICATION-ELECTRONICS N5
TIME: 3 HOURS
MARKS: 100

INSTRUCTIONS AND INFORMATION

1. Answer all the questions.
2. Read all the questions carefully.
3. Number the answers according to the numbering system used in this question paper.
4. Start each section on a new page.
5. Write neatly and legibly.

Copyright reserved

QUESTION 1

Indicate whether the following statements are TRUE or FALSE by writing only 'True' or 'False' next to the question number (1.1–1.10) in the ANSWER BOOK.

1.1 When an AC flows through an inductor it sets up a back emf which is always equal and opposite to the applied emf.

1.2 The reactance of capacitors and inductors is determined by their physical construction and applied frequency.

1.3 A symmetrical two-port network has similar input and output ports that cannot be interchanged.

1.4 L-type pads are used for matching purposes only.

1.5 A constant k-filter is a simple T- or π-filter that does not have a sharp cut-off frequency.

1.6 The radio frequency (RF) stage provides selectivity to the receiver.

1.7 A limiter converts frequency variations into audio signals for amplification.

1.8 The Yagi-Uda antenna is ideal for point-to-point communication at low frequencies.

1.9 The non-resonant antenna is used over a wide range of frequencies.

1.10 Bode diagrams are used as approximations of frequency and phase response in an RC circuit.

(10 × 1) **[10]**

QUESTION 2: AC NETWORKS

2.1 Give the THREE characteristics of the following RLC circuits at resonance:

2.1.1 Series circuit

2.1.2 Parallel circuit

(2 × 6) (12)

2.2 A supply of 20 V at a frequency of 50 Hz is connected across a parallel circuit consisting of a 1 kΩ resistor, a coil of 0,5 H and a 10 µF capacitor.

2.2.1 Draw the circuit. (2)

2.2.2 Determine each of the following:

(a) Total supply current (10)

(b) Phase angle (2)

2.2.3 Draw the phasor diagram. (2)

[28]

Copyright reserved

QUESTION 3: FOUR-TERMINAL NETWORKS

3.1 Find the characteristic impedance of the network in FIGURE 1.

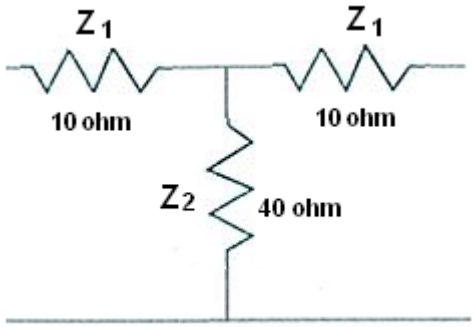

FIGURE 1 (9)

3.2 Explain how an ordinary, unbalanced, four-terminal network can be converted to a balanced network. (3)

[12]

QUESTION 4: FILTERS

4.1 Design T- and TT-type high pass filters with an impedance of 600 Ω and a cut-off frequency of 50 Hz. (12)

4.2 Determine the cut-off frequency of the filter in FIGURE 2.

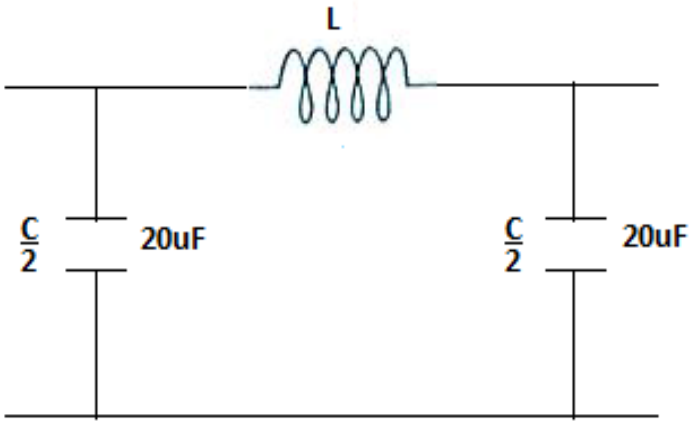

FIGURE 2 (3)

[15]

Copyright reserved

QUESTION 5: RECEIVERS AND TRANSMTTERS

5.1 Identify the block diagram in FIGURE 3. (1)

5.2 Name the stages indicated in the block diagram in FIGURE 3 by writing the answer next to the letter (A–G) in the ANSWER BOOK.

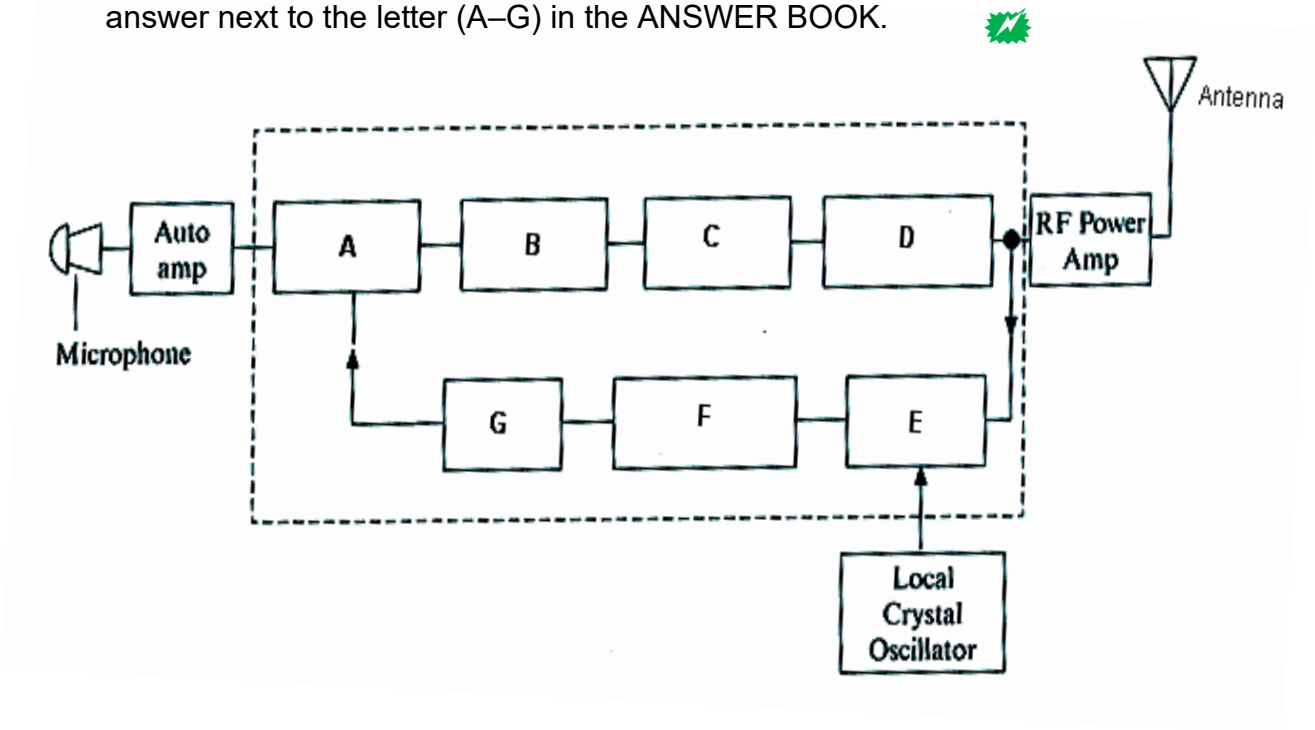

FIGURE 3 (14)
[15]

QUESTION 6: ANTENNAE

6.1 Explain how the radiation efficiency of an antenna can be improved. (4)

6.2 Differentiate between the antenna terms below.

6.2.1 Bandwidth

6.2.2 Beamwidth

(2 × 3) (6)
[10]

QUESTION 7: BODE PLOTS

7.1 Explain why the phase-lead and phase-lag networks are used in Bode plots. (4)

7.2 Explain TWO important factors of the pole/zero diagram with reference to the Bode plot. (6)
[10]

TOTAL: 100

Copyright reserved